KM-1820

Includes: Fax System (K)

SERVICE MANUAL

Published in Mar ’05
2GM70760

CAUTION

DANGER OF EXPLOSION IF BATTERY IS INCORRECTLY REPLACED. REPLACE ONLY WITH THE SAME OR EQUIVALENT TYPE RECOMMENDED BY THE MANUFACTURER. DISPOSE OF USED BATTERIES ACCORDING TO THE MANUFACTURER'S INSTRUCTIONS.

ATTENTION

IL Y A DANGER D'EXPLOSION S'IL Y A REMPLACEMENT INCORRECT DE LA BATTERIE. REMPLACER UNIQUEMENT AVEC UNE BATTERIE DU MÊME TYPE OU D'UN TYPE REC-OMMANDÉ PAR LE CONSTRUCTEUR. METTRE AU RÉBUT LES BATTERIES USAGÉES CONFORMÉMENT AUX INSTRUCTIONS DU FABRICANT.

Revision history

Revision	Date	Replaced pages	Remarks

Safety precautions

This booklet provides safety warnings and precautions for our service personnel to ensure the safety of their customers, their machines as well as themselves during maintenance activities. Service personnel are advised to read this booklet carefully to familiarize themselves with the warnings and precautions described here before engaging in maintenance activities.

Safety warnings and precautions

Various symbols are used to protect our service personnel and customers from physical danger and to prevent damage to their property. These symbols are described below:

⚠**DANGER**: High risk of serious bodily injury or death may result from insufficient attention to or incorrect compliance with warning messages using this symbol.

⚠**WARNING**:Serious bodily injury or death may result from insufficient attention to or incorrect compliance with warning messages using this symbol.

⚠**CAUTION**:Bodily injury or damage to property may result from insufficient attention to or incorrect compliance with warning messages using this symbol.

Symbols

The triangle (△) symbol indicates a warning including danger and caution. The specific point of attention is shown inside the symbol.

General warning.

Warning of risk of electric shock.

Warning of high temperature.

⃠ indicates a prohibited action. The specific prohibition is shown inside the symbol.

General prohibited action.

Disassembly prohibited.

● indicates that action is required. The specific action required is shown inside the symbol.

General action required.

Remove the power plug from the wall outlet.

Always ground the copier.

1. Installation Precautions

⚠ WARNING

- Do not use a power supply with a voltage other than that specified. Avoid multiple connections to one outlet: they may cause fire or electric shock. When using an extension cable, always check that it is adequate for the rated current. .....

- Connect the ground wire to a suitable grounding point. Not grounding the copier may cause fire or electric shock. Connecting the earth wire to an object not approved for the purpose may cause explosion or electric shock. Never connect the ground cable to any of the following: gas pipes, lightning rods, ground cables for telephone lines and water pipes or faucets not approved by the proper authorities. .....

⚠ CAUTION:

- Do not place the copier on an infirm or angled surface: the copier may tip over, causing injury. .....

- Do not install the copier in a humid or dusty place. This may cause fire or electric shock. .....

- Do not install the copier near a radiator, heater, other heat source or near flammable material. This may cause fire. .....

- Allow sufficient space around the copier to allow the ventilation grills to keep the machine as cool as possible. Insufficient ventilation may cause heat buildup and poor copying performance. .....

- Always handle the machine by the correct locations when moving it. .....

- Always use anti-toppling and locking devices on copiers so equipped. Failure to do this may cause the copier to move unexpectedly or topple, leading to injury. .....

- Avoid inhaling toner or developer excessively. Protect the eyes. If toner or developer is accidentally ingested, drink a lot of water to dilute it in the stomach and obtain medical attention immediately. If it gets into the eyes, rinse immediately with copious amounts of water and obtain medical attention. .....

- Advice customers that they must always follow the safety warnings and precautions in the copier's instruction handbook. .....

2. Precautions for Maintenance

⚠WARNING

- Always remove the power plug from the wall outlet before starting machine disassembly. .....
- Always follow the procedures for maintenance described in the service manual and other related brochures. .....
- Under no circumstances attempt to bypass or disable safety features including safety mechanisms and protective circuits. .....
- Always use parts having the correct specifications. .....
- Always use the thermostat or thermal fuse specified in the service manual or other related brochure when replacing them. Using a piece of wire, for example, could lead to fire or other serious accident. .....
- When the service manual or other serious brochure specifies a distance or gap for installation of a part, always use the correct scale and measure carefully. .....
- Always check that the copier is correctly connected to an outlet with a ground connection. .....
- Check that the power cable covering is free of damage. Check that the power plug is dust-free. If it is dirty, clean it to remove the risk of fire or electric shock. .....
- Never attempt to disassemble the optical unit in machines using lasers. Leaking laser light may damage eyesight. .....
- Handle the charger sections with care. They are charged to high potentials and may cause electric shock if handled improperly. .....

⚠CAUTION

- Wear safe clothing. If wearing loose clothing or accessories such as ties, make sure they are safely secured so they will not be caught in rotating sections. .....
- Use utmost caution when working on a powered machine. Keep away from chains and belts. .....
- Handle the fixing section with care to avoid burns as it can be extremely hot. .....
- Check that the fixing unit thermistor, heat and press rollers are clean. Dirt on them can cause abnormally high temperatures. .....
- Do not remove the ozone filter, if any, from the copier except for routine replacement. .....

- Do not pull on the AC power cord or connector wires on high-voltage components when removing them; always hold the plug itself. .....

- Do not route the power cable where it may be stood on or trapped. If necessary, protect it with a cable cover or other appropriate item. .....

- Treat the ends of the wire carefully when installing a new charger wire to avoid electric leaks. .....

- Remove toner completely from electronic components. .....

- Run wire harnesses carefully so that wires will not be trapped or damaged. .....

- After maintenance, always check that all the parts, screws, connectors and wires that were removed, have been refitted correctly. Special attention should be paid to any forgotten connector, trapped wire and missing screws. .....

- Check that all the caution labels that should be present on the machine according to the instruction handbook are clean and not peeling. Replace with new ones if necessary. .....

- Handle greases and solvents with care by following the instructions below: .....
  - · Use only a small amount of solvent at a time, being careful not to spill. Wipe spills off completely.
  - · Ventilate the room well while using grease or solvents.
  - · Allow applied solvents to evaporate completely before refitting the covers or turning the main switch on.
  - · Always wash hands afterwards.

- Never dispose of toner or toner bottles in fire. Toner may cause sparks when exposed directly to fire in a furnace, etc. .....

- Should smoke be seen coming from the copier, remove the power plug from the wall outlet immediately. .....

3. Miscellaneous

WARNING

- Never attempt to heat the drum or expose it to any organic solvents such as alcohol, other than the specified refiner; it may generate toxic gas. .....

CONTENTS

1-1 Specifications

1-1-1 Specifications 1-1-1
1-1-2 Names of parts 1-1-3
(1) Main body 1-1-3
(2) Operation panel 1-1-4

1-2 Handling Precautions

1-2-1 Drum 1-2-1
1-2-2 Installation environment 1-2-1

1-3 Installation

1-3-1 Unpacking and installation 1-3-1
(1) Installation procedure 1-3-1
1-3-2 Connecting the cable 1-3-16
(1) Connecting the network cable 1-3-16
(2) Connecting the printer cable 1-3-17
1-3-3 Installing the document processor (option) 1-3-18
1-3-4 Installing the expanding memory (option) 1-3-21
1-3-5 Installing the fax system (option) 1-3-22

1-4 Maintenance Mode

1-4-1 Maintenance mode 1-4-1
(1) Executing a maintenance item 1-4-1
(2) Maintenance modes 1-4-2
(3) Contents of maintenance mode items 1-4-3
1-4-2 System settings 1-4-18
(1) Executing a system setting item 1-4-18
(2) System settings 1-4-19
1-4-3 Service settings 1-4-21
(1) Executing a service setting item 1-4-21
(2) Contents of service setting items 1-4-22

1-5 Troubleshooting

1-5-1 Paper misfeed detection 1-5-1
(1) Paper misfeed indication 1-5-1
(2) Paper misfeed detection conditions 1-5-2
(3) Paper misfeeds 1-5-4
1-5-2 Self-diagnosis 1-5-8
(1) Self-diagnostic function 1-5-8
(2) Self-diagnostic codes 1-5-8
1-5-3 Image formation problems 1-5-15
(1) No image appears (entirely white). 1-5-16
(2) No image appears (entirely black). 1-5-16
(3) Image is too light. 1-5-17
(4) Background is visible. 1-5-17
(5) A white line appears longitudinally. 1-5-17
(6) A black line appears longitudinally. 1-5-18
(7) A black line appears laterally. 1-5-18
(8) One side of the print image is darker than the other. 1-5-18
(9) Black dots appear on the image. 1-5-19
(10) Image is blurred. 1-5-19
(11) The leading edge of the image is consistently misaligned with the original. 1-5-19
(12) Paper creases. 1-5-20
(13) Offset occurs. 1-5-20
(14) Image is partly missing. 1-5-20

(15) Fixing is poor. 1-5-21
(16) Image center does not align with the original center. 1-5-21
1-5-4 Electrical problems 1-5-22
(1) The machine does not operate when the power switch is turned on. 1-5-22
(2) The main motor does not operate. (C2000) 1-5-22
(3) The scanner motor does not operate. 1-5-22
(4) Cooling fan does not operate. 1-5-22
(5) The feed clutch does not operate. 1-5-22
(6) The MP feed clutch does not operate. 1-5-23
(7) The registration clutch does not operate. 1-5-23
(8) The eraser lamp does not turn on. 1-5-23
(9) The exposure lamp does not turn on. 1-5-23
(10) The exposure lamp does not turn off. 1-5-23
(11) The heater lamp does not turn on. 1-5-23
(12) The heater lamp does not turn off. 1-5-23
(13) Main charging is not performed. 1-5-24
(14) Transfer charging is not performed. 1-5-24
(15) A paper jam in the paper feed or exit section is indicated when the power switch is turned on. 1-5-24
(16) The message requesting cover to be closed is displayed when the front cover is closed. 1-5-24
(17) Others. 1-5-24
1-5-5 Mechanical problems 1-5-25
(1) No primary paper feed. 1-5-25
(2) No secondary paper feed. 1-5-25
(3) Skewed paper feed. 1-5-25
(4) The scanner does not travel. 1-5-25
(5) Multiple sheets of paper are fed at one time. 1-5-25
(6) Paper jams. 1-5-25
(7) Abnormal noise is heard. 1-5-25

1-6 Assembly and Disassembly

1-6-1 Precautions for assembly and disassembly 1-6-1
(1) Precautions 1-6-1
1-6-2 Removing the process unit 1-6-2
1-6-3 Removing the principal outer covers 1-6-3
(1) Removing the front top cover/face-down output tray 1-6-3
(2) Removing the right cover 1-6-4
(3) Removing the left cover 1-6-4
1-6-4 Removing the feed roller 1-6-5
1-6-5 Removing the MP feed roller 1-6-6
1-6-6 Removing the transfer roller 1-6-8
1-6-7 Removing the primary circuit PWBs 1-6-9
(1) Removing the engine PWB 1-6-9
(2) Removing the main PWB 1-6-10
(3) Removing the power supply PWB and high voltage PWB 1-6-12
(4) Removing the bias PWB 1-6-13
1-6-8 Removing the main motor and drive unit 1-6-14
1-6-9 Removing and splitting the fuser unit 1-6-18
(1) Removing the separation craws 1-6-20
(2) Removing the heater lamp 1-6-21
(3) Removing the heat roller 1-6-22
(4) Removing the thermistor 1-6-24
(5) Removing the thermal cutout 1-6-25
(6) Removing the press roller 1-6-26
1-6-10 Removing and scanner unit 1-6-27
1-6-11 Removing the laser scanner unit and the eraser lamp 1-6-29
1-6-12 Removing the ISU unit 1-6-32

1-6-13 Removing the exposure lamp 1-6-34
1-6-14 Removing the scanner mirror A 1-6-36
1-6-15 Removing the scanner motor 1-6-37
1-6-16 Removing the main charger unit 1-6-40
1-6-17 Adjustment the maintenance mode 1-6-41
(1) Adjusting the leading edge registration of image printing 1-6-41
(2) Adjusting the center line of image printing 1-6-42
(3) Adjusting the amount of slack in the paper 1-6-43
(4) Adjusting magnification of the scanner in the main scanning direction 1-6-44
(5) Adjusting magnification of the scanner in the auxiliary scanning direction 1-6-45
(6) Adjusting the scanner leading edge registration 1-6-46
(7) Adjusting the scanner center line 1-6-47
(8) Adjusting the margins for scanning an original on the contact glass 1-6-48
(9) Adjusting the DP magnification 1-6-49
(10) Adjusting the DP leading edge registration 1-6-50
(11) Adjusting the DP trailing edge registration 1-6-51
(12) Adjusting the DP center line 1-6-52
(13) Adjusting the margins for scanning the original from the DP 1-6-53

1-7 Upgrading the firmware

1-7-1 Upgrading the firmware on the main PWB 1-7-1

2-1 Mechanical construction

2-1-1 Paper feeding system 2-1-1
(1) Paper feed control 2-1-2
(2) Paper feeding mechanism 2-1-3
2-1-2 Original scanning system 2-1-4
(1) ISU unit 2-1-6
2-1-3 Electrophotographic system 2-1-7
(1) Electrophotographic cycle 2-1-7
(1-1) Process unit mechanism 2-1-8
(2) Main charging 2-1-9
(2-1) Photo conductive drum 2-1-9
(2-2) Charging the drum 2-1-10
(3) Exposure 2-1-11
(3-1) Laser scanner unit 2-1-12
(3-2) Drum surface potential 2-1-13
(4) Development 2-1-14
(5) Transfer 2-1-15
(6) Fusing 2-1-16
(6-1) Fuser unit mechanism 2-1-17
(7) Cleaning 2-1-18

2-2 Electrical Parts Layout

2-2-1 Electrical parts layout 2-2-1
(1) Main unit 2-2-1
(2) Scanner unit 2-2-2

2-3 Operation of the PWBs

2-3-1 Main PWB 2-3-1
2-3-2 Engine PWB 2-3-7
(1) Eraser lamp control circuit 2-3-9
(2) Heater lamp control circuit 2-3-10
(3) Polygon motor control circuit 2-3-13
2-3-3 Power supply PWB 2-3-17
2-3-4 Bias PWB 2-3-19
2-3-5 High voltage PWB 2-3-20
(1) Interlock switch 2-3-21

2-3-6 CCD PWB 2-3-22
2-3-7 Operation PWB 2-3-24
2-3-8 Scanner PWB 2-3-26

2-4 Appendixes

Timing chart No. 1 2-4-1
Timing chart No. 2 2-4-2
Timing chart No. 3 2-4-3
Wiring diagram 2-4-4

1-1-1 Specifications

Type	Desktop
Copying system	Indirect electrostatic system
Originals	Sheets of paper (Maximum original size: folio/$8^1/_2$" × 14" [legal]) Platen: Sheets of paper, books, 3-dimensional objects (Maximum original size: folio/ $8^1/_2$" × 14" [legal])
Original feed system	Contact glass: fixed Document processor (optional): sheet-through
Copy paper	Cassette: Plain paper (60 - 105 g/m^2) MP tray: Plain paper (60 - 163 g/m^2) Special paper: Transparencies, letterhead, colored paper, recycled paper Note: Use the MP tray for special paper.
Copying sizes	Maximum: folio/$8^1/_2$" × 14" [legal] Minimum: A6R /$5^1/_2$" × $8^1/_2$"
Magnification ratios	Manual mode: 50 - 200%, 1% increments
Copying speed	At 100% magnification, platen: A4/$8^1/_2$" × 11": 18 copies/min. A5: 10 copies/min. $8^1/_2$" × 14": 15 copies/min. At 100% magnification, document processor: A4/$8^1/_2$" × 11": 18 copies/min.
First copy speed	Apporox. 9.5 s (A4/$8^1/_2$" × 11", original placed on the platen)
Warm-up time	20 s or less Recovery from the low power mode: 10 s or less Recovery from the sleep mode: 15 s or less (at room temperature 23 °C/73.4 °F, humidity 60% RH)
Paper feed system	Cassette: 250 sheets (80 g/m^2) MP tray: 50 sheets (80 g/m^2) 25 sheets (120 g/m^2) 10 sheets (160 g/m^2) 1 sheet (Transparency)
Stacking capacity	Output tray: Approx. 150 sheets (80 g/m^2) Face-up tray: 30 sheets (80 g/m^2) 1 sheet (Special paper)
Standard memory	96 MB (64 MB of system memory and 32 MB of additional memory) (Approx. 70 pages of memory possible with letter size, 5%, Text+Photo mode)
Additional memory	1 slot (64 MB, 128 MB or 256 MB)
Continuous copying	1 - 999 sheets
Scanning system	Flat bed scanning by CCD image sensor
Resolution	Reading (scanning) 600 × 600 dpi Writing (printing) 600 × 600 dpi
Original quality mode	Text+Photo, Photo and Text
Light source	Cold cathode lamp
Photoconductor	OPC (drum diameter 30 mm)
Charging system	Single positive corona charging
Developing system	Single element reversing process
Transfer system	Transfer roller
Fusing system	Heat roller Heat source: halogen heaters (750 W) Control temperature: 190 °C/374 °F (at normal ambient temperature) Abnormally high temperature protection device: thermal cutout
Charge erasing system	Exposure by cleaning lamp
Cleaning system	Cleaning blade
Dimensions	496 (W) × 421 (D) × 385 (H) mm $19^9/_{16}$" (W) × $16^5/_8$" (D) × $15^3/_{16}$" (H)
Weight	Approx. 14.5 kg/32.0 lbs
Floor requirements	496 (W) × 740 (D) mm $19^9/_{16}$" (W) × $29^3/_{16}$" (D)
Functions	Auto exposure adjustment, Ecoprint mode, Zoom mode, Preset zoom mode, Off mode, Print override mode, Low power mode, Layout modes, Sort mode and Program function

Power source ..... 120 V AC, 60 Hz, 7.8 A
220 - 240 V AC, 50/60 Hz, 4.0 A
Power consumption ..... 854 W
Options ..... Paper feeder, document processor (DP), additional memory and fax system

• Printing functions

Printing speed ..... A4/8$^1/_2$" × 11": 18 prints/min.
A5: 10 prints/min.
8$^1/_2$" × 14": 15 prints/min.
First print speed ..... Apporox. 8 s (A4/8$^1/_2$" × 11")
Resolution ..... 300, 600 dpi and Fast 1200
Compatible operation system ..... Microsoft Windows 95/98/Me/NT 4.0/2000/XP
Apple Macintosh OS 9.x/OS X 10.x
UNIX/Linux
Host interface ..... Parallel: 1 port (IEEE1284)
USB: 1 port (Hi-speed USB 2.0)
Ethernet: 1 port (10BASE-T/100BASE-TX)
PDL ..... PRESCRIBE
Emulation mode ..... Line printer, IBM proprinter, DIABLO 630, EPSON LQ-850, PCL6 and KPDL

• Scanning functions

Scanning speed ..... Monochrome: 18 spm
Full color or Grayscale: 4.8 spm
(1:1 - A4/8$^1/_2$" × 11", 200 dpi)
Resolution ..... 200 × 100, 200 × 400, 200, 300, 400 and 600 dpi
Color mode ..... Full color, Grayscale and Monochrome
Halftone ..... Full color: 8 bit/dot: each color
Grayscale: 8 bit/dot
Monochrome: 1 bit/dot
Original quality mode ..... Text+Photo, Photo, Text and OCR
File format ..... PDF (All modes), TIFF (only monochrome mode), JPEG (except monochrome mode)
Host interface ..... Ethernet: 1 port (10BASE-T/100BASE-TX)
USB (TWAIN): 1 port (Hi-speed USB)

1-1-2 Names of parts

(1) Main body

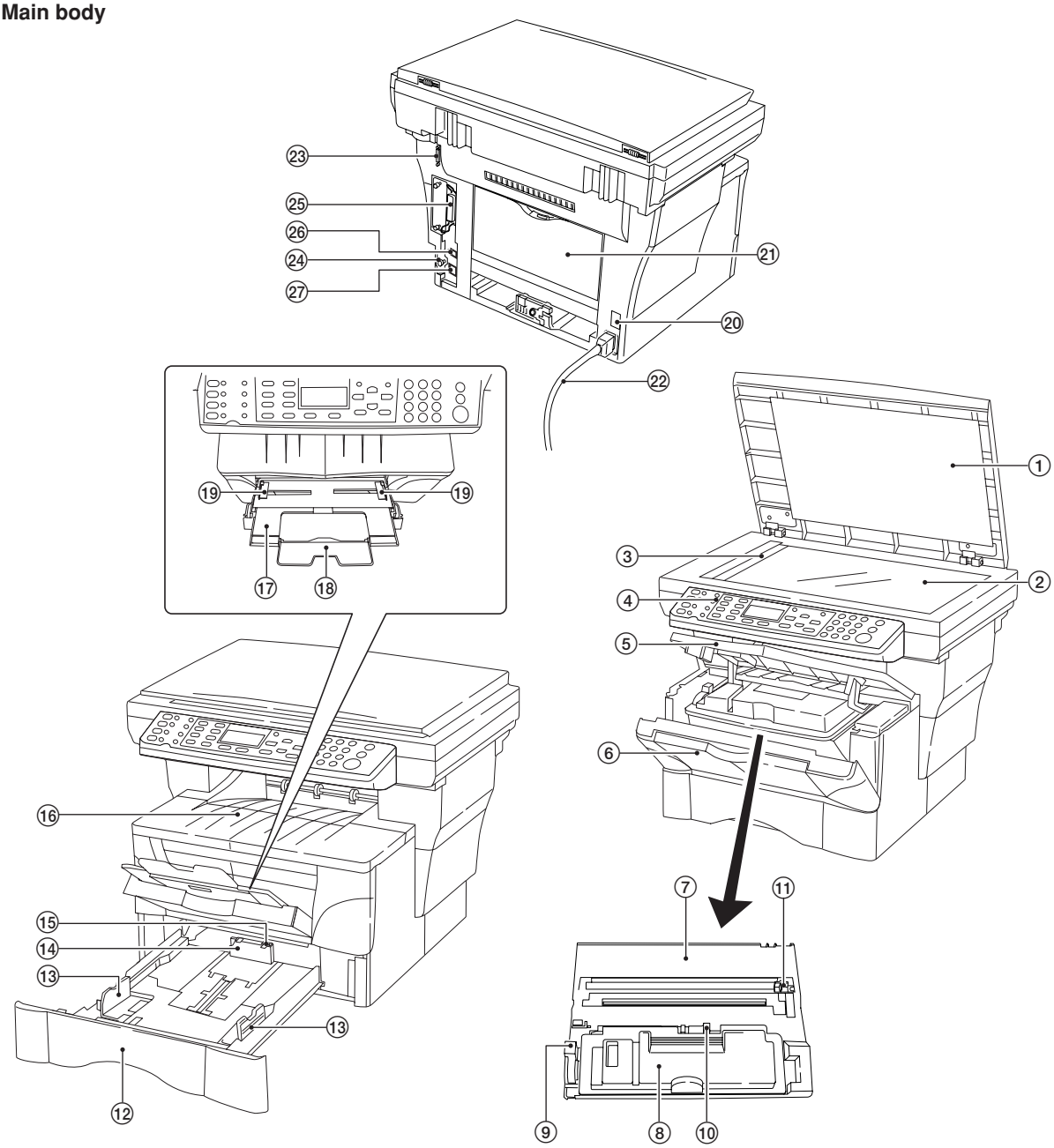

Figure 1-1-1 Names of parts

① Original cover
② Contact glass
③ Original size indicator plate
④ Operation panel
⑤ Front top cover
⑥ Front cover
⑦ Process unit
⑧ Toner container
⑨ Lock lever
⑩ Toner container release lever
⑪ Main charger cleaner
⑫ Cassette
⑬ Paper guide
⑭ Paper stopper
⑮ Stopper extension lock
⑯ Face-down output tray
⑰ MP tray
⑱ Extension tray
⑲ Paper width guides
⑳ Power switch
㉑ Face-up output tray
㉒ Power cord
㉓ DP interface connector
㉔ Memory cover
㉕ Parallel interface connector
㉖ USB interface connector
㉗ Network interface connector

(2) Operation panel

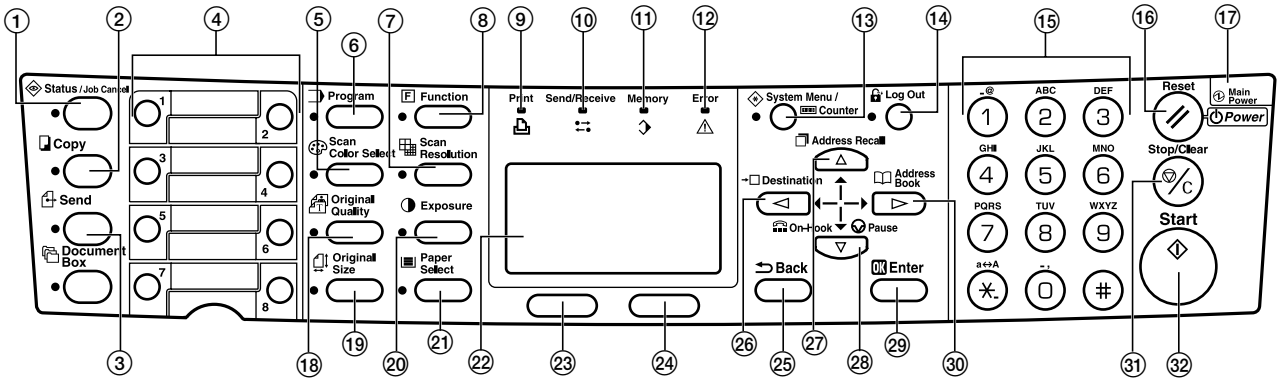

Figure 1-1-2

① Status/Job cancel key and indicator
② Copy key and indicator
③ Send key and indicator
④ One-touch keys (1 to 8)
⑤ Scan color select key and indicator
⑥ Program key and indicator
⑦ Scan resolution key and indicator
⑧ Function key and indicator
⑨ Print indicator
⑩ Send/Receive indicator
⑪ Memory indicator
⑫ Error indicator
⑬ System menu/Counter key and indicator
⑭ Log out key and indicator
⑮ Numeric keys
⑯ Reset/Power key
⑰ Main power indicator
⑱ Original quality key and indicator
⑲ Original size key and indicator
⑳ Exposure key and indicator
㉑ Paper select key and indicator
㉒ Message display
㉓ Left select key
㉔ Right select key
㉕ Back key
㉖ Left cursor key
㉗ Up cursor key
㉘ Down cursor key
㉙ Right cursor key
㉚ Enter key
㉛ Stop/Clear key
㉜ Start key and indicator

1-2-1 Drum

Note the following when handling or storing the drum.

- When removing the process unit, never expose the drum surface to strong direct light.
- Keep the drum at an ambient temperature between 10 °C/50 °F and 32.5 °C/90.5 °F and at a relative humidity not higher than 80% RH. Avoid abrupt changes in temperature and humidity.
- Avoid exposure to any substance which is harmful to or may affect the quality of the drum.
- Do not touch the drum surface with any object. Should it be touched by hands or stained with oil, clean it.

1-2-2 Installation environment

1. Temperature: 10 - 32.5 °C/50 - 90.5 °F
2. Humidity: 20 - 80%RH
3. Power supply: 120 V AC, 7.8 A
   220 - 240 V AC, 4.0 A
4. Power source frequency: 50 Hz ±0.3%/60 Hz ±0.3%
5. Installation location
   - Avoid direct sunlight or bright lighting. Ensure that the photoconductor will not be exposed to direct sunlight or other strong light when removing paper jams.
   - Avoid extremes of temperature and humidity, abrupt ambient temperature changes, and hot or cold air directed onto the machine.
   - Avoid dust and vibration.
   - Choose a surface capable of supporting the weight of the machine.
   - Place the machine on a level surface (maximum allowance inclination: 1°).
   - Avoid air-borne substances that may adversely affect the machine or degrade the photoconductor, such as mercury, acidic of alkaline vapors, inorganic gasses, NOx, SOx gases and chlorine-based organic solvents.
   - Select a room with good ventilation.
6. Allow sufficient access for proper operation and maintenance of the machine.
   Machine front: 1000 mm/39$^{3}/_{8}$" Machine rear: 300 mm/11$^{13}/_{16}$"
   Machine right: 300 mm/11$^{13}/_{16}$" Machine left: 300 mm/11$^{13}/_{16}$"

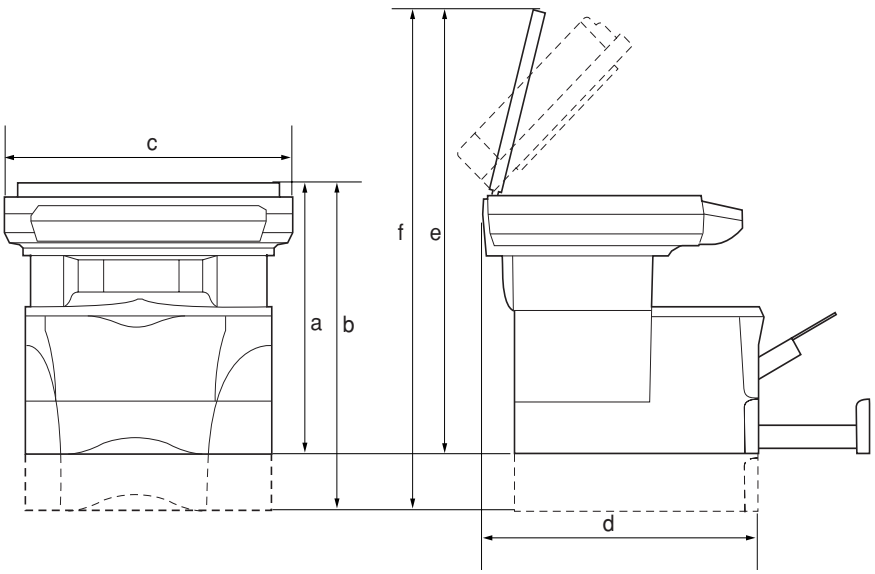

a: 385 mm/15$^{3}/_{16}$"
b: 460 mm/18$^{1}/_{8}$"
c: 496 mm/19$^{9}/_{16}$"
d: 421 mm/16$^{5}/_{8}$"
e: 665 mm/26$^{3}/_{16}$"
f: 740 mm/29$^{3}/_{16}$"

Figure 1-2-1 Installation dimensions

1-3-1 Unpacking and installation

(1) Installation procedure

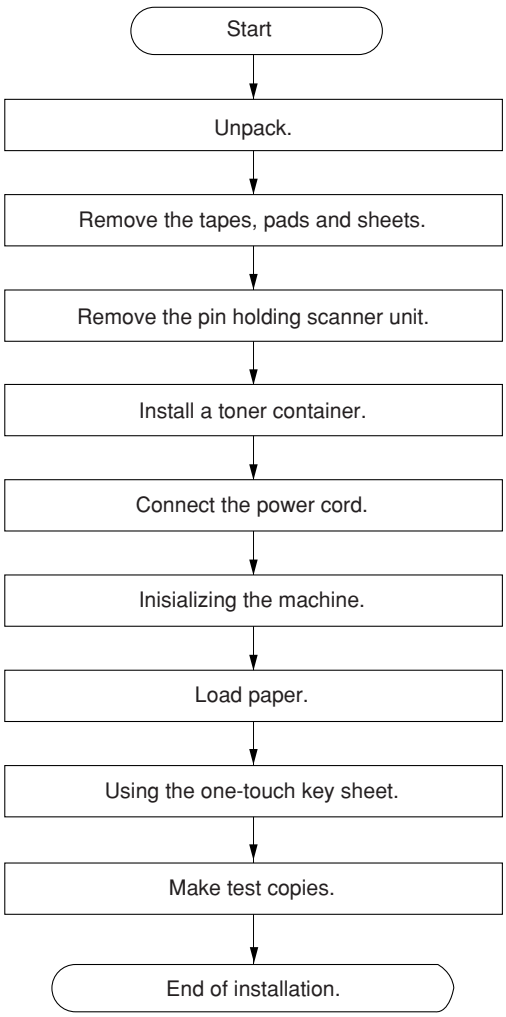

Unpack.

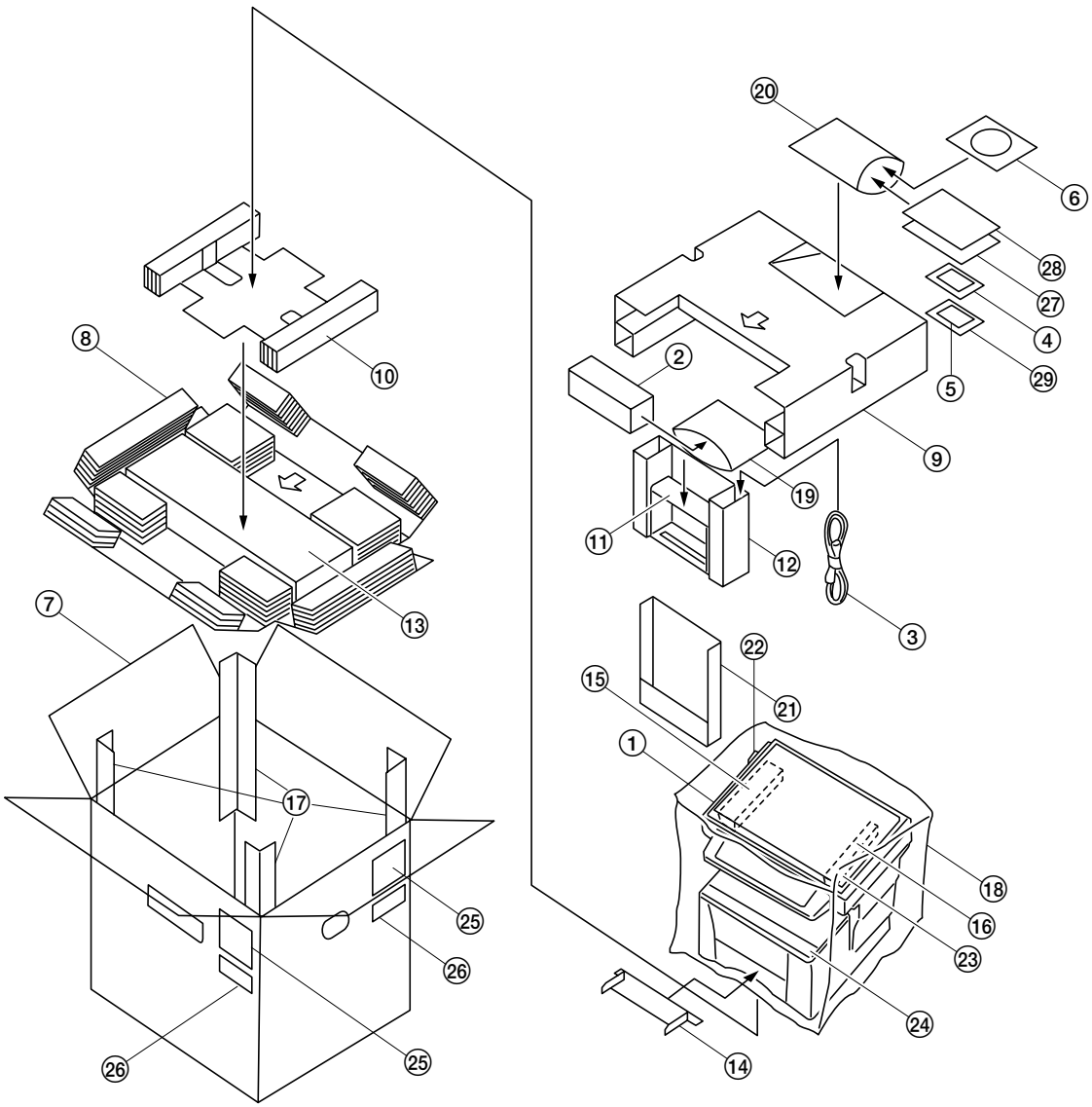

Figure 1-3-1 Unpacking

① Main body	⑪ Front spacer	㉑ Pocket spacer
② Toner container	⑫ Front pad	㉒ Paper tag
③ Power cord	⑬ Bottom spacer	㉓ Top sheet
④ Cleaning cloth	⑭ Cassette spacer	㉔ Output tray sheet
⑤ One-touch key sheet	⑮ Left pad	㉕ Bar code labels
⑥ CD ROM	⑯ Right pad	㉖ Label
⑦ Outer case	⑰ Corner supports	㉗ Operation guide
⑧ Bottom pad	⑱ Products cover	㉘ Installation guide
⑨ Upper pad	⑲ Plastic bag	㉙ Plastic bag
⑩ Side pad	⑳ Plastic bag	

CAUTIONS

- Be sure to hold both the front and rear sides of the machine when carrying it, as shown in the illustration.
- Be sure not to pull the cassette out when holding the front of the machine.
- Be sure that the original cover is closed whenever transporting the machine.
- Do not attempt to carry the machine by holding only the top portion. Doing so may result in you dropping the machine and thereby damaging the machine and/or its covers.

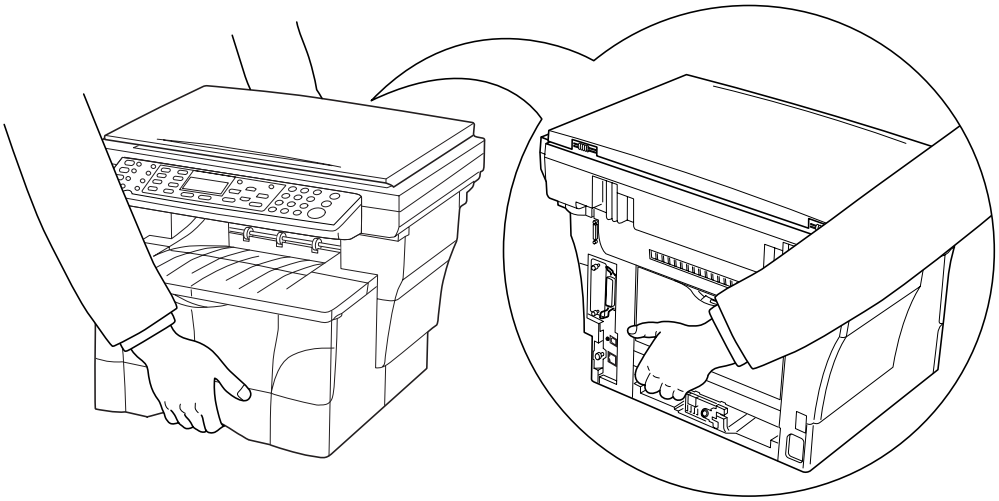

Figure 1-3-2

Remove the tapes, pads and sheets.

1. Remove the sheet and the two tapes.

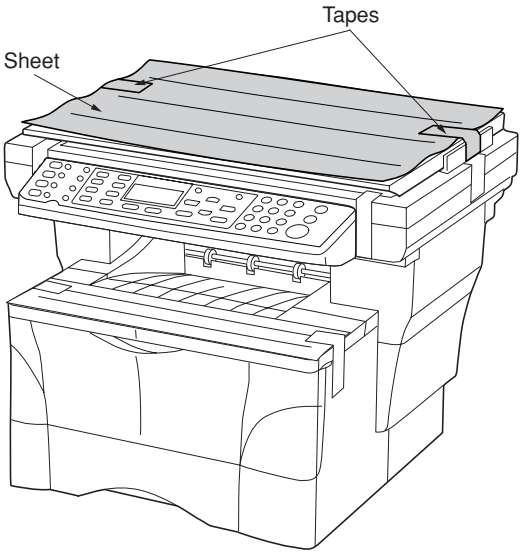

Figure 1-3-3

2. Open the original cover.

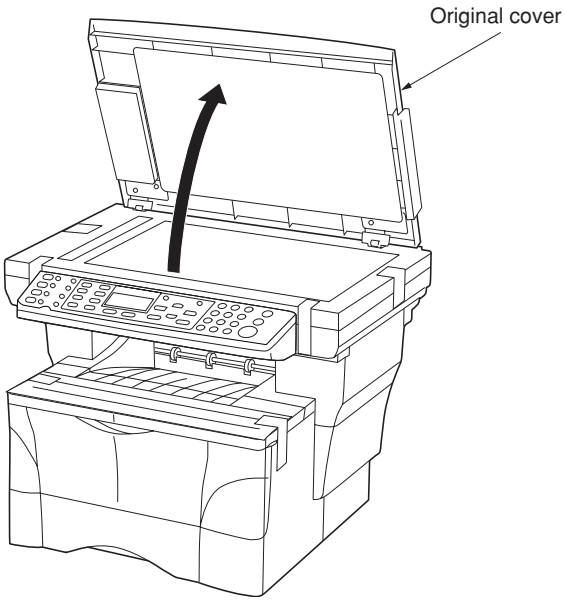

Figure 1-3-4

3. Remove the eight tapes, the two pads and the sheet.

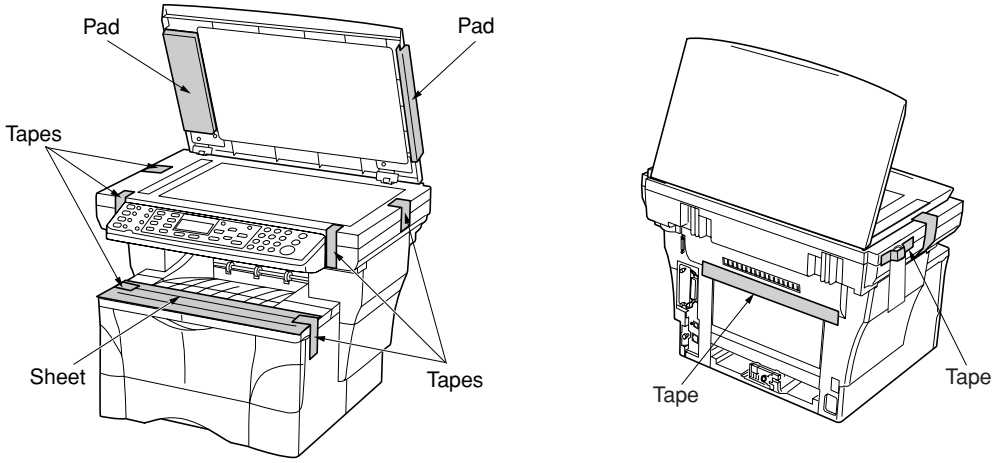

Figure 1-3-5

4. Pull the cassette out of the machine.

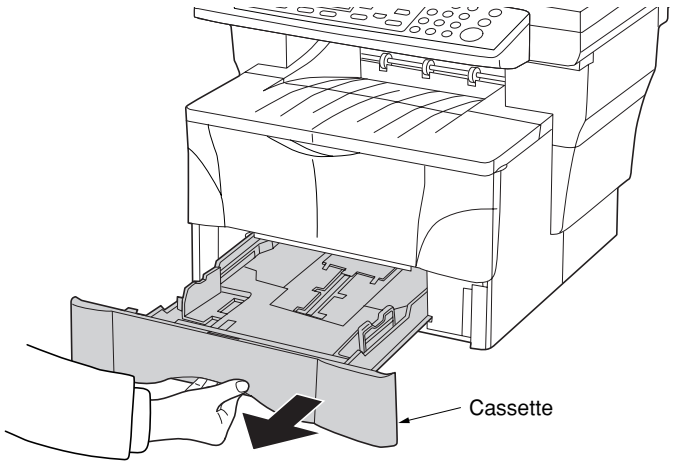

Figure 1-3-6

5. Remove the cassette spacer from inside the cassette.

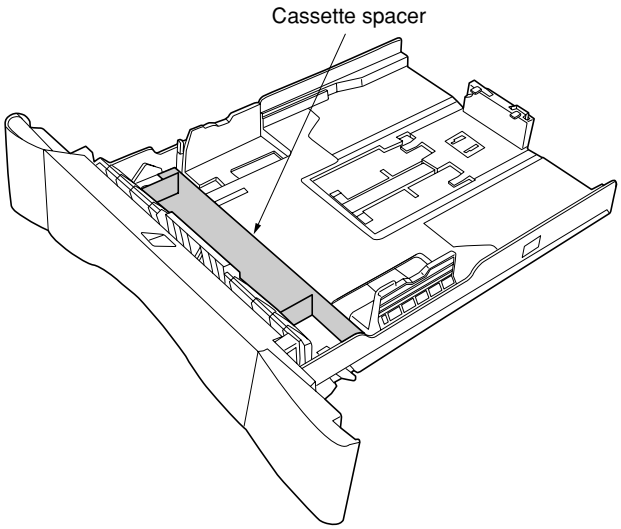

Figure 1-3-7

Remove the pin holding scanner unit.

1. Remove the yellow pin for scanner unit and the paper tag from the left side of the machine.

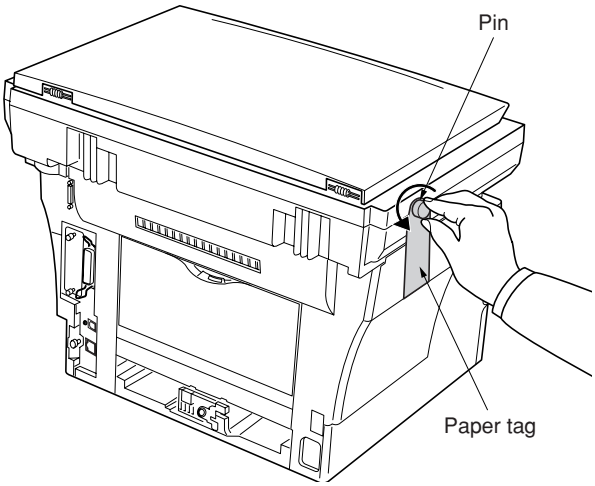

Figure 1-3-8

Install a toner container.

1. Open the front top cover and front cover.

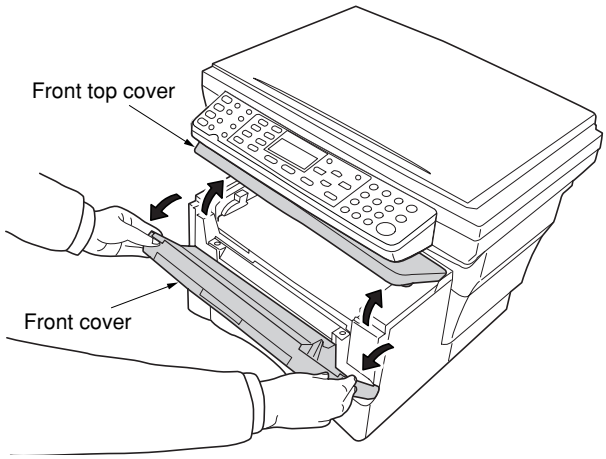

Figure 1-3-9

2. Store the pin for scanner unit on the inside of the front cover as shown in the illustration.
   * Be sure to save this pin as it is essential that it be used whenever the machine is moved. The location for storing the pin is clearly marked on the right side of the inside portion of the front cover.

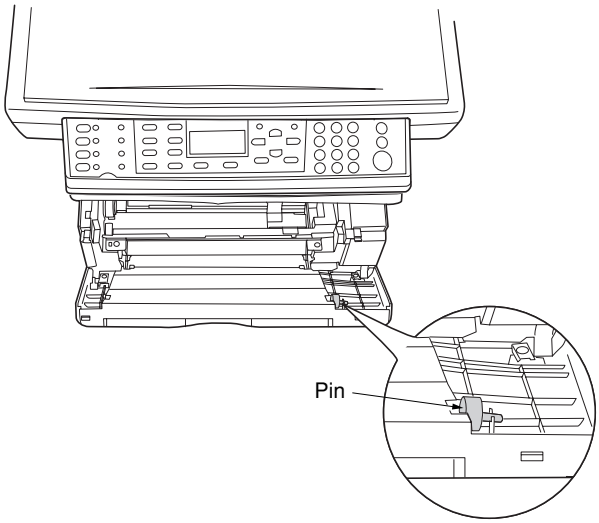

Figure 1-3-10

3. Remove the process unit from the machine.

CAUTIONS
- Place the process unit on a clean, level surface.
- Never expose the process unit to any sort of impact or shock.
- The drum in the process unit is sensitive to light. Never expose the drum even to normal office lighting (500 lux) for more than five minutes.

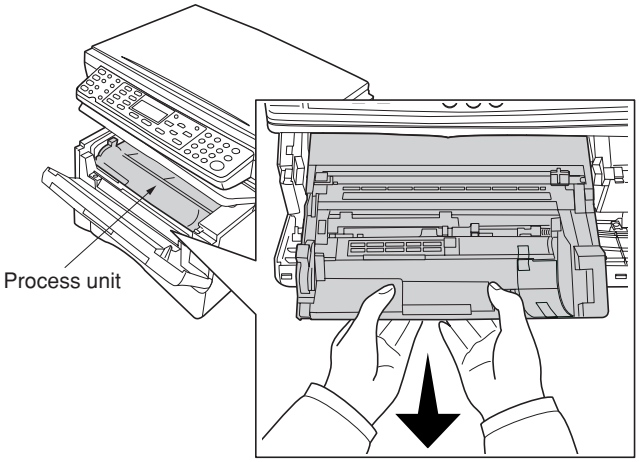

Figure 1-3-11

4. Remove the protective cardboard.

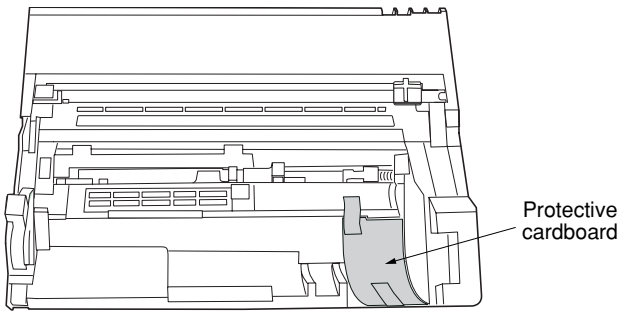

Figure 1-3-12

5. Move the lock lever until it is in its unlocked position (marked UNLOCK).

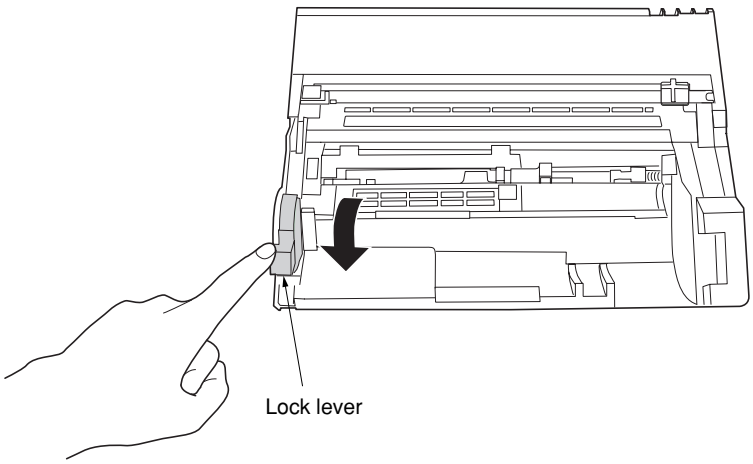

Figure 1-3-13

6. Shake the toner container horizontally back and forth five or six times so that the toner inside of it becomes evenly distributed.

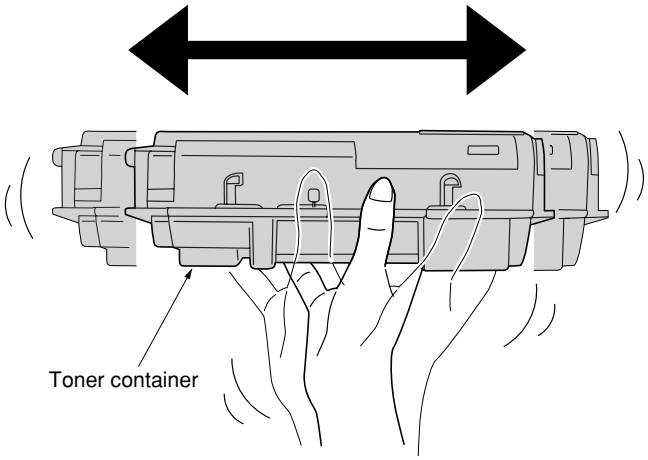

Figure 1-3-14

7. Remove the orange protective seal.

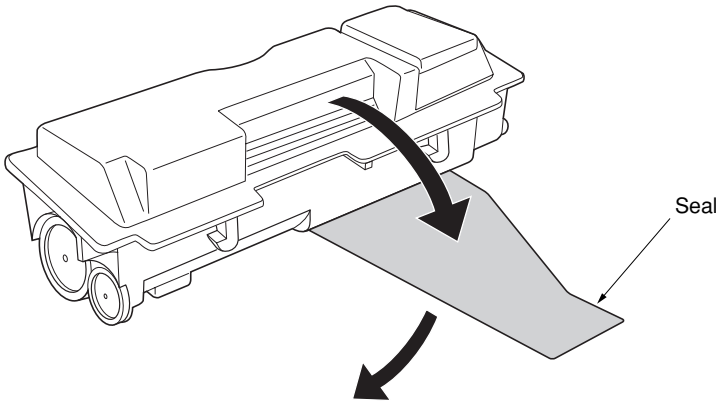

Figure 1-3-15

8. Align the knob on the left side of the container with the groove in the process unit and set the toner container into the process unit.

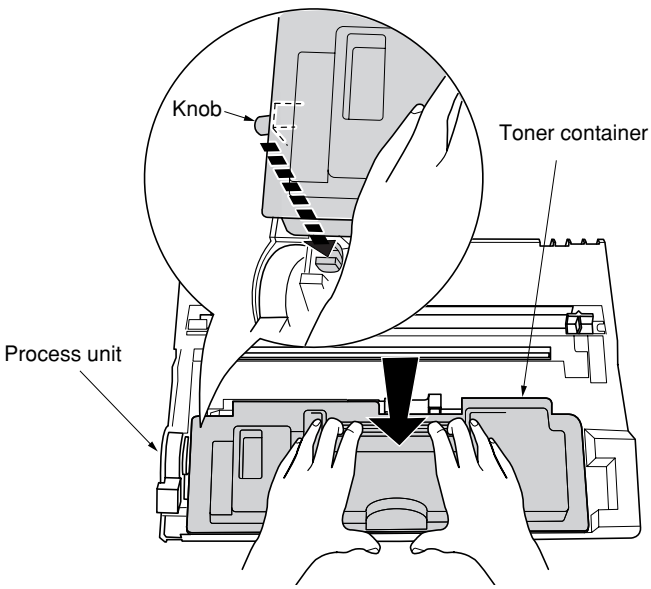

Figure 1-3-16

9. Hold the process unit stable and push on the areas marked PUSH HERE on the toner container until the container clicks into place.

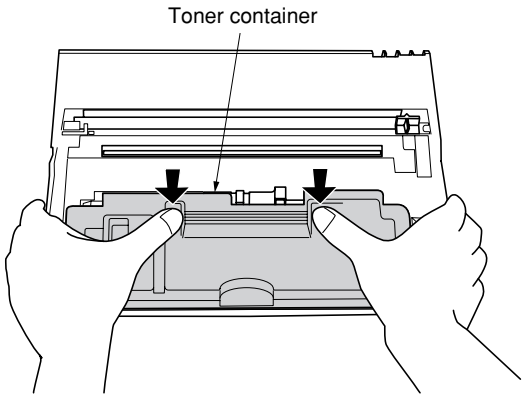

Figure 1-3-17

10. Push the lock lever back into its locked position.

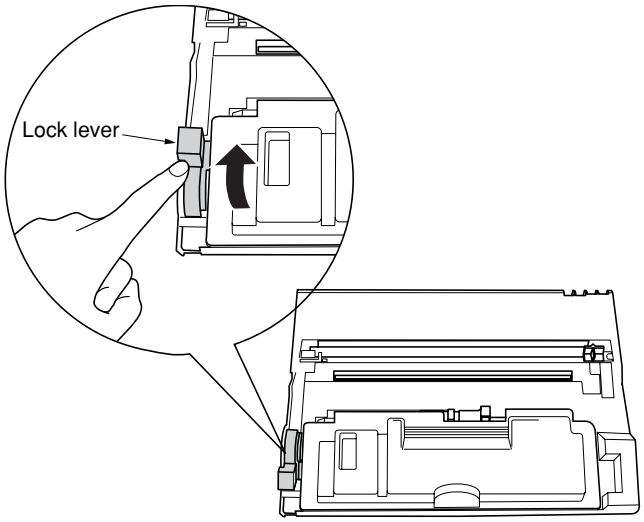

Figure 1-3-18

11. Set the process unit into the machine by aligning the pins on both sides of the process unit with the guides inside the machine, and then slide the process unit all the way back into the machine until it stops.

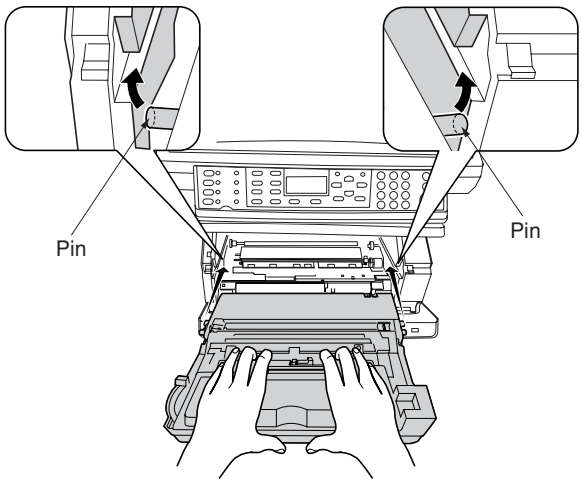

Figure 1-3-19

12. Close the front cover.

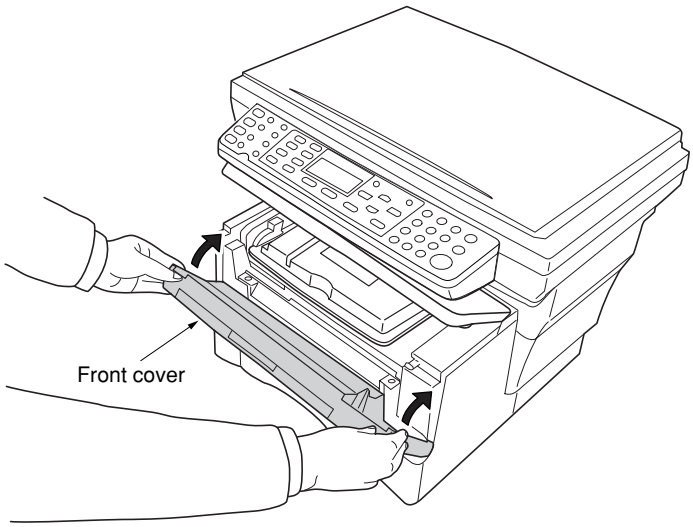

Figure 1-3-20

13. Close the front top cover.

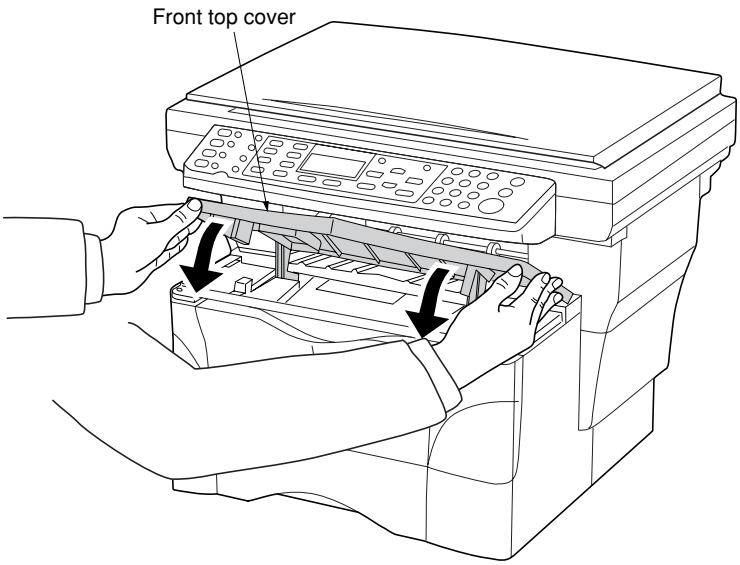

Figure 1-3-21

Connect the power cord.

1. Connect the power cord.

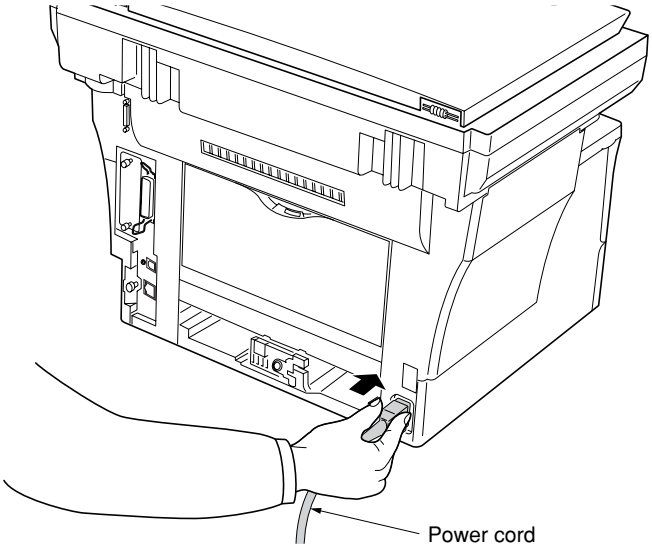

Figure 1-3-22

Initializing the machine.

1. Turn the power switch to the machine ON (|).

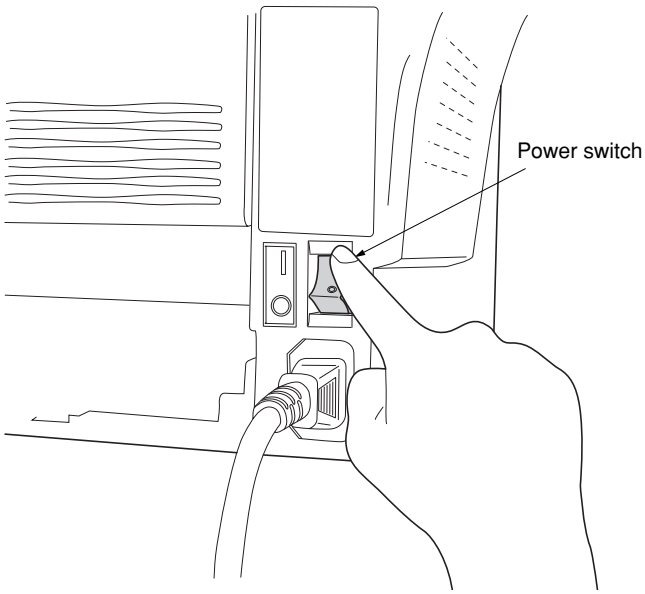

Figure 1-3-23

The machine will begin replenishing the toner. Wait until it has completed that operation. (15 minutes)
Once the toner has been replenished and the machine is once again in a ready-to-use state, Ready to copy will appear on the message display and the Start indicator will light green.

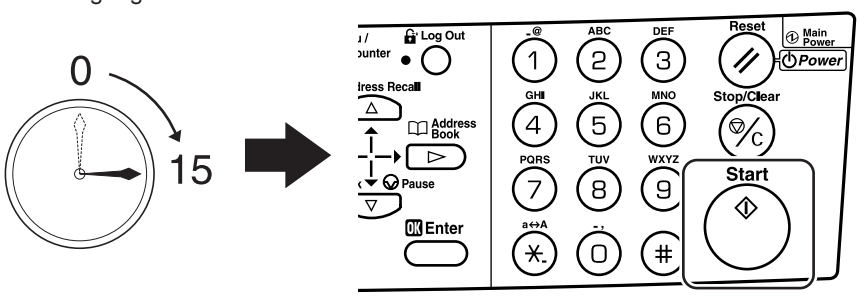

Figure 1-3-24

Load paper.

1. Pull the cassette out of the machine.

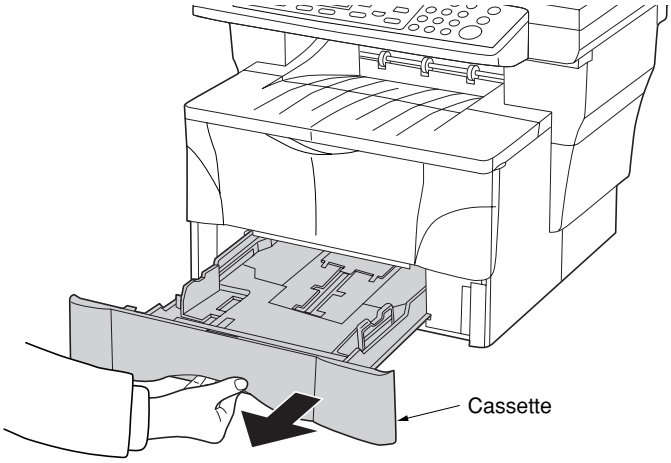

Figure 1-3-25

2. Adjust the paper stopper in the rear portion of the cassette to fit the size of the paper being loaded there by pressing in on the release buttons and sliding the paper stopper to the corresponding paper size.

NOTES

- The paper sizes are marked on the bottom of the cassette.
- The default factory setting is for A4/Letter size paper.

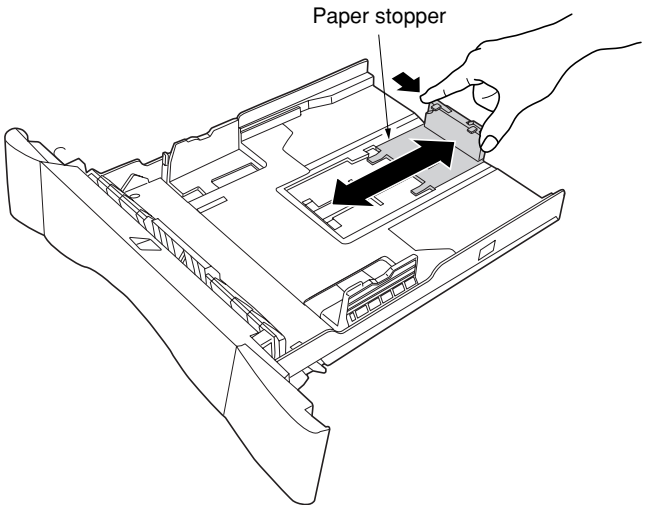

Figure 1-3-26

Adjusting the paper stopper for Folio or Oficio II size paper

1) Remove the stopper extension lock from the paper stopper.
2) Slide the paper stopper towards the rear of the cassette until the grooves that are cut into the paper stopper are aligned with the rear edge of the cassette.
3) Insert the stopper extension lock into the holes in the paper stopper, as shown in the illustration.

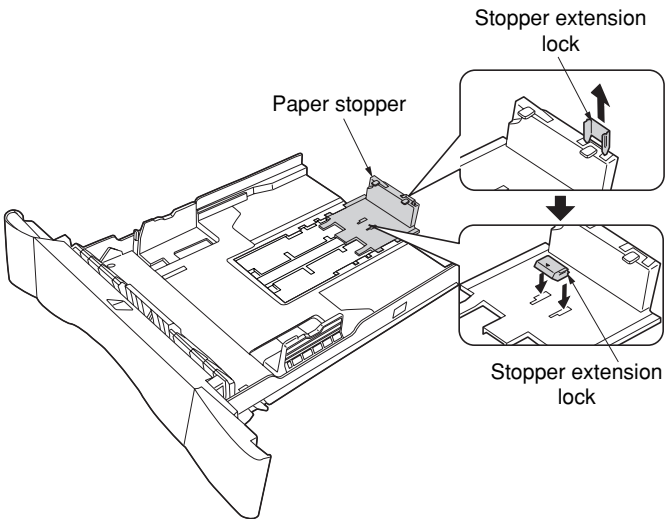

Figure 1-3-27

4) Press down on the stopper extension lock and slide the paper stopper towards the rear of the cassette to set the lock into place.
The paper stopper is in position for Folio and Oficio II size paper.

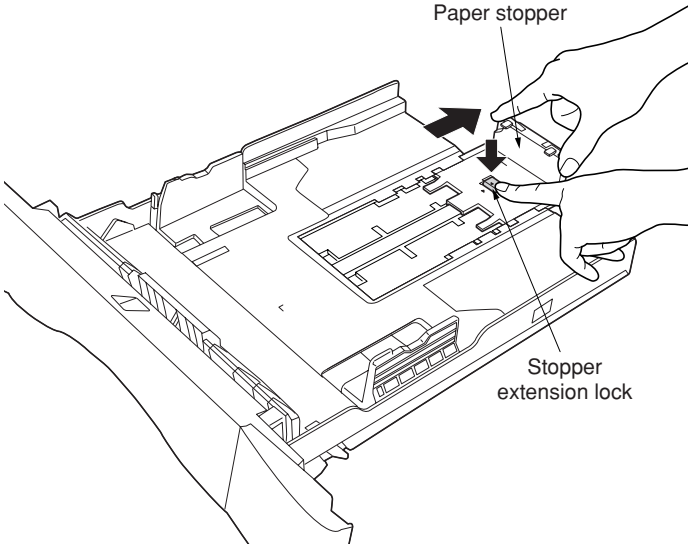

Figure 1-3-28

3. Adjust the paper width guides by pressing in on the release buttons and sliding the guides to fit the width of the paper being loaded in the cassette.

NOTES

- The paper sizes are marked on the bottom of the cassette.
- The default setting is for A4/Letter size paper.

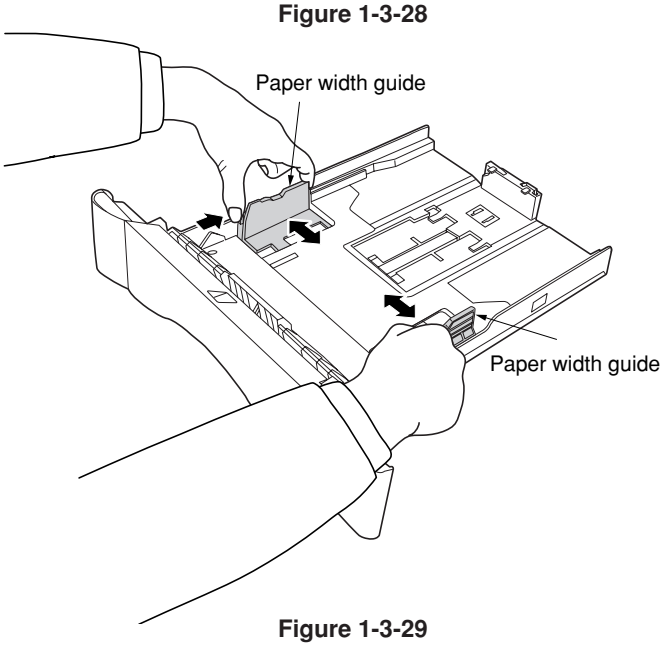

Figure 1-3-29

4. Set the paper in the cassette so that the leading edge is aligned against the paper stopper, but making sure that none of the paper gets caught on the overhanging tabs.

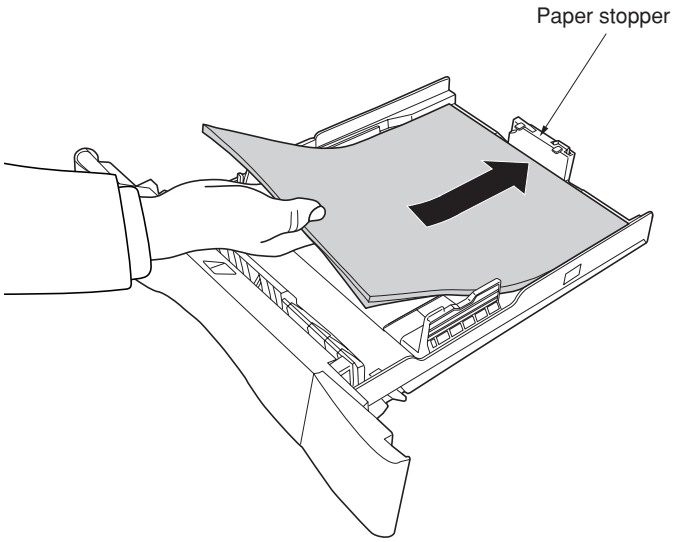

Figure 1-3-30

NOTES

- Always adjust the paper stopper and paper width guides before loading paper into the cassette. Failure to do so may result in skewed paper feed and/or a paper jam.
- Make sure that the paper is set securely against the paper stopper and the paper width guides. If there is any gap between the paper and the stopper or guides, readjust the paper stopper and/or the paper width guides, as appropriate.
- When you are loading paper into the cassette, make sure that the side to be copied or printed onto is facing downward.
- Be sure to load paper so that it is not folded or curled, etc.
- Do not load more paper than indicated by the lines located on the width guides.

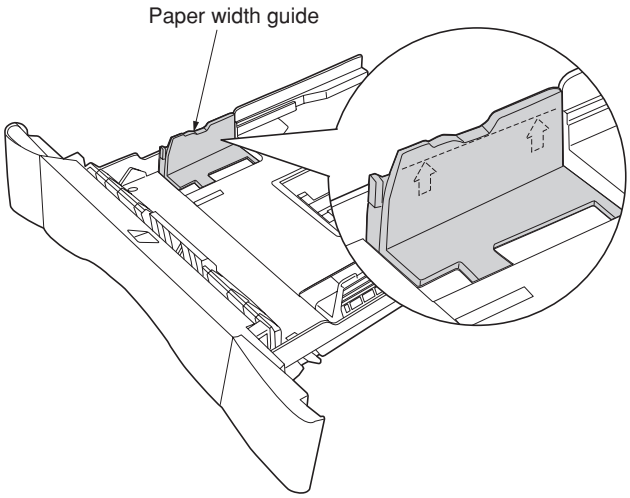

Figure 1-3-31

5. Push the cassette securely all the way back into the machine until it stops.

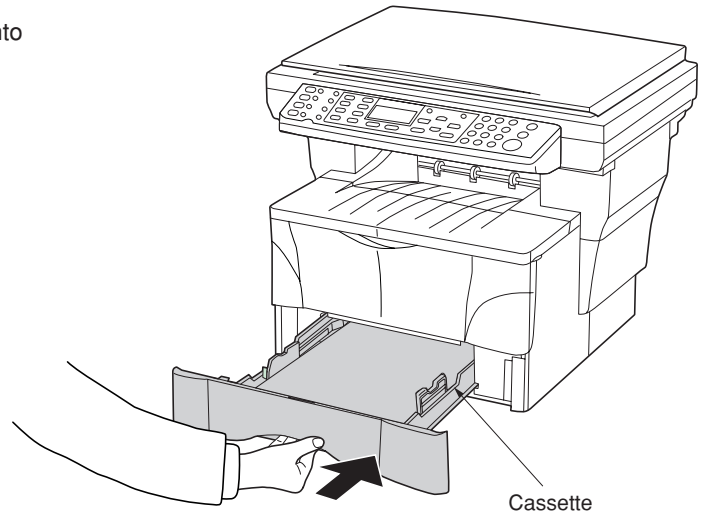

Figure 1-3-32

Using the one-touch key sheet.

1. Remove the one-touch key sheet from bottom side of the operation panel.

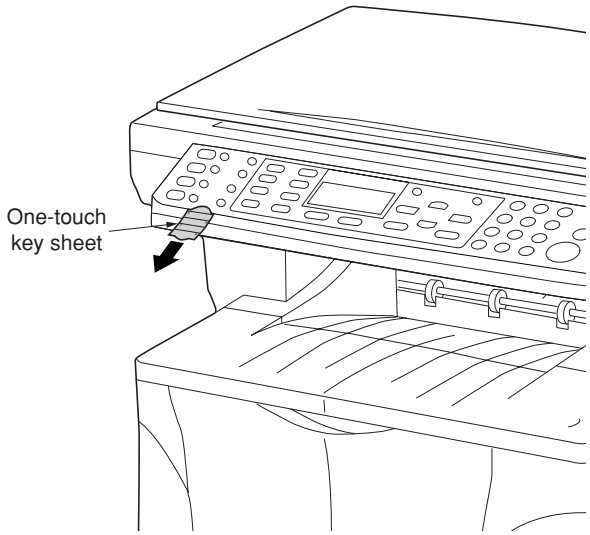

Figure 1-3-33

2. Enter the information for the registered destinations onto the one-touch key sheet. (There are 4 spare one-touch key sheets included with this machine.)
3. Insert the sheet back between the one-touch keys from the bottom side of the operation panel.

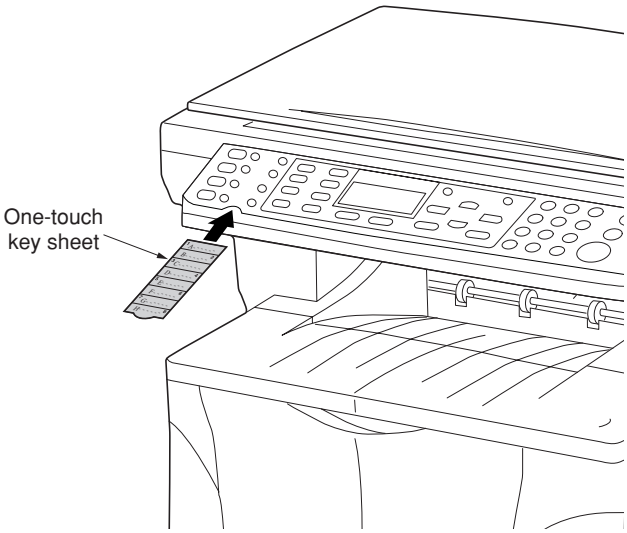

Figure 1-3-34

Make test copies.

End of installation.

1-3-2 Connecting the cables

(1) Connecting the network cable

To connect the machine to a network, use an network cable (10Base-T or 100Base-TX).

Procedure

1. Turn the power switch located on the rear side of the machine off (O), and remove the power cord from the outlet.

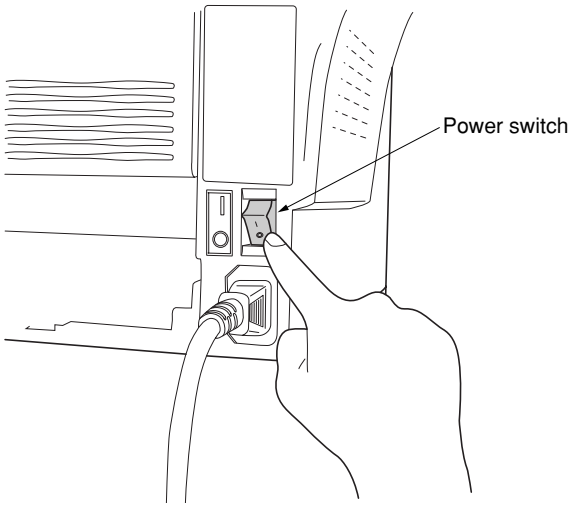

Figure 1-3-35

2. Connect the network cable to the network connector at the rear side of the machine.
3. Connect the other end of the network cable to network device (hub).
4. Make network settings.

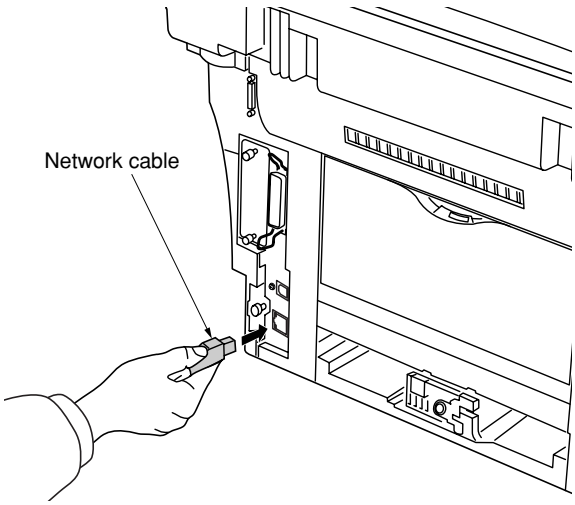

Figure 1-3-36

(2) Connecting the printer cable

To connect the machine directly to your computer, use either a parallel cable or USB cable.

Procedure

1. Turn the power switch located on the rear side of the machine off (O), remove the power cord from the outlet and turn the power off to computer.

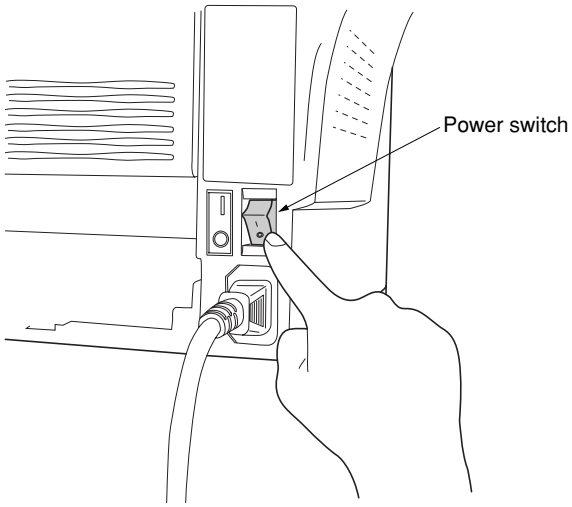

Figure 1-3-37

2. Connect the printer cable to the parallel interface connector or USB interface connector located at the rear side of the machine.
3. Connect the other end of the printer cable to the parallel interface connector or USB interface connector on computer.

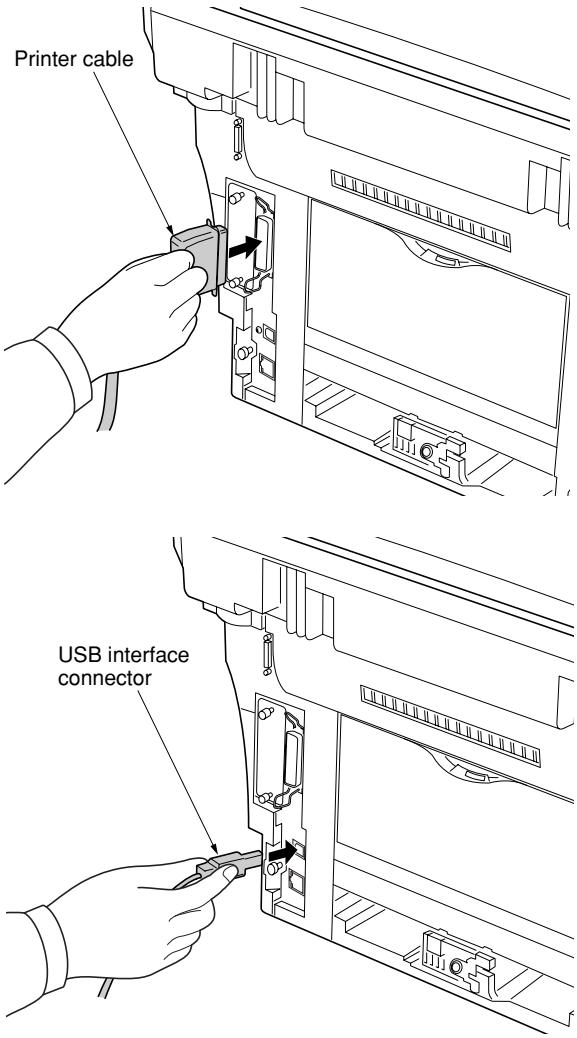

Figure 1-3-38

1-3-3 Installing the document processor (option)

Procedure

1. Remove all of the components to the document processor from the box.
   CAUTION
   Be sure to hold both sides of the document processor when carrying it, as shown in the illustration.
   Be particularly careful NOT to touch the guide film or the thin white surface indicated by the Ⓐ in the illustration.

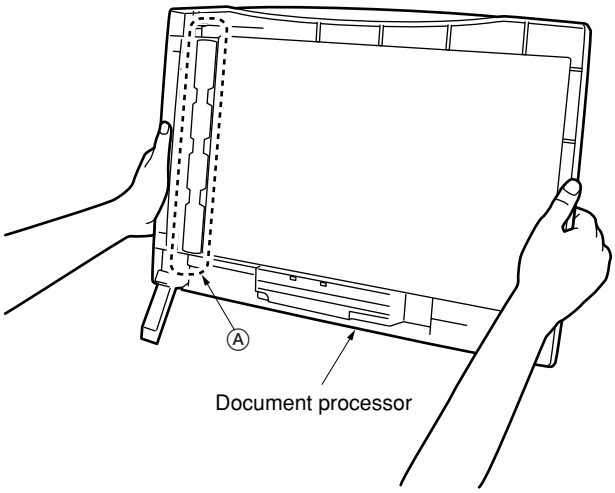

Figure 1-3-39

2. Turn the power switch located on the rear side of the machine off (O). Disconnect the power cord.

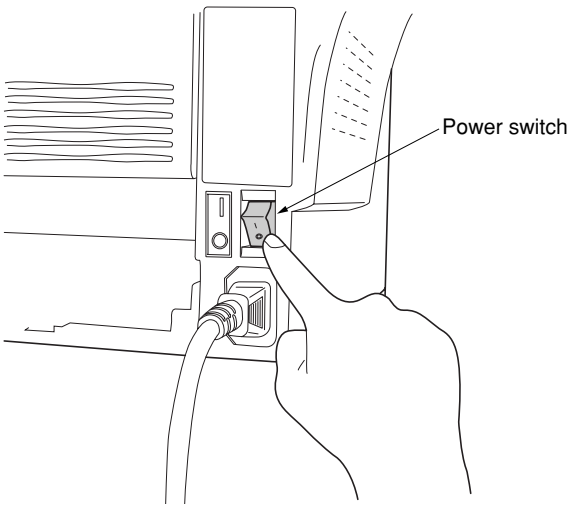

Figure 1-3-40

3. Open the original cover and lift it upward to remove it from the machine.

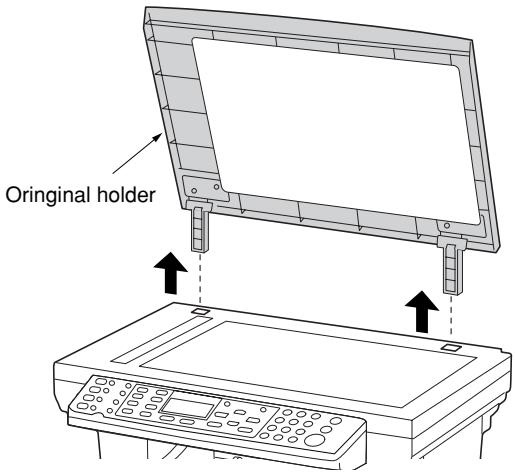

Figure 1-3-41

4. Attach the document processor to the machine.
   CAUTION
   Be sure that the connection cable does not get caught between the document processor and the machine when attaching the document processor to the machine.

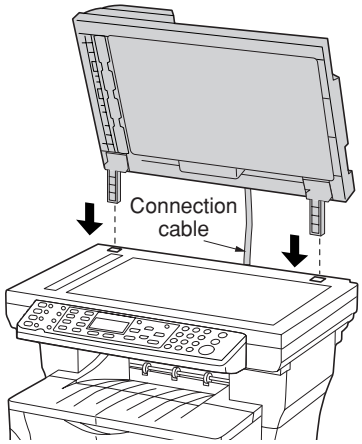

Figure 1-3-42

5. Gently close the document processor.

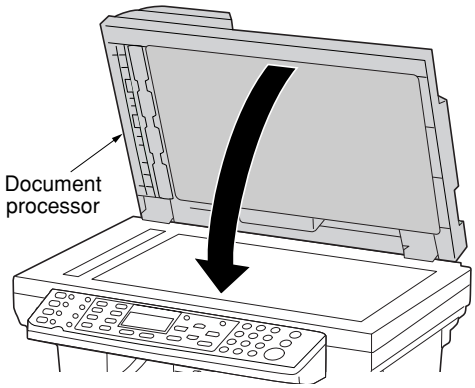

Figure 1-3-43

6. Attached the open end of the connection cable to the connector on the machine.

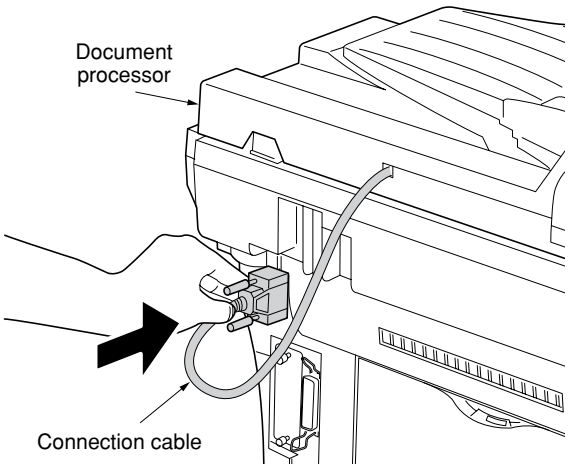

Figure 1-3-44

CAUTION
Be sure to tighten the pins securely when connecting the cable.

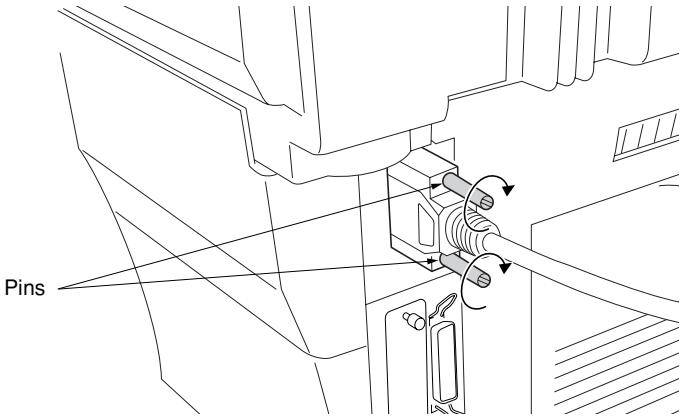

Figure 1-3-45

7. Connect the power cord and turn the power switch on (|). Warm up will begin. 1 will appear on the operation panel and the start indicator will light when the machine is in a ready state.

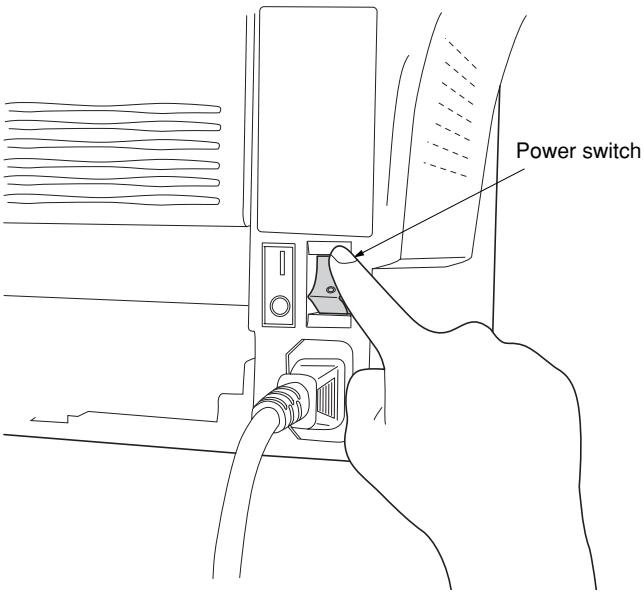

Figure 1-3-46

1-3-4 Installing the expanding memory (option)

The main PWB of the machine is equipped with one socket for memory expansion. Expansion memory is available in the form of DIMM (Dual In-line Memory Module).

CAUTION
Take precautions that no foreign substances such as metal chips or liquid get inside the machine during the installation process. Operation of the machine during the presence of a foreign substance may lead to fire or electric shock.

WARNING
Turn the power switch off. Disconnect the power cord.

Procedure

1. Remove the screw and then remove the memory cover.
3. Open the clips on both ends of the DIMM socket.
4. Insert the DIMM into the DIMM socket so that the notches on the DIMM align with the corresponding protrusions in the slot.
5. Close the clips on the DIMM slot to secure the DIMM.

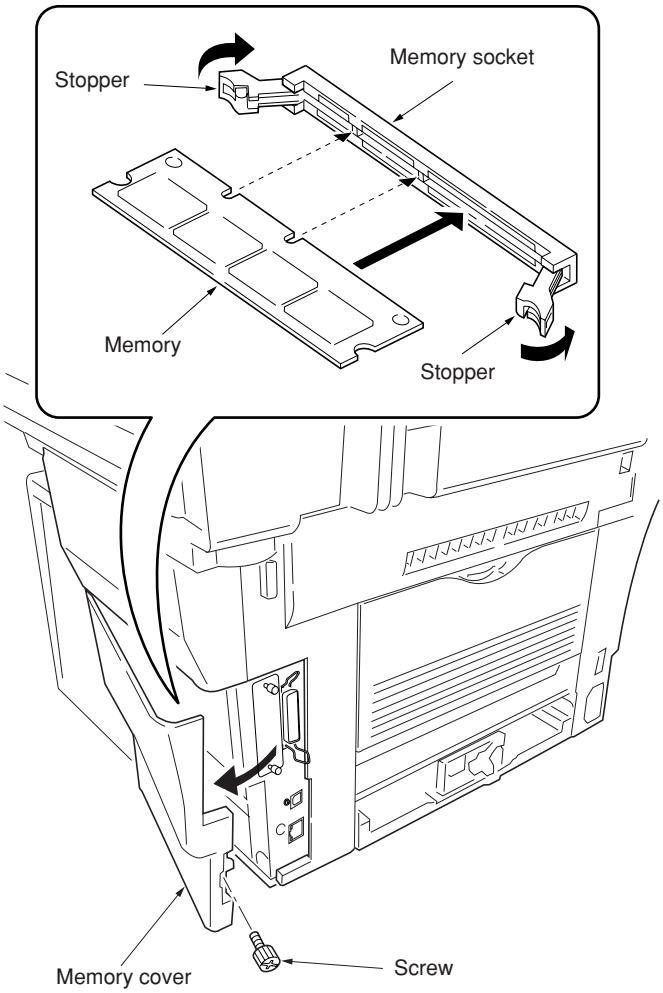

Figure 1-3-47 Inserting the DIMM

1-3-5 Installing the fax system (option)

Turn the machine's power switch to OFF and unplug the machine from the power supply before installing the fax system.

Precautions for handling the FAX assembly
The FAX assembly is delivered in an antistatic air-padded bag. To prevent any damage, briefly touch a large metal object to ensure discharge of static electricity before removing the FAX assembly from the bag.
Hold the FAX assembly by the metal plate on front as shown. Do not touch the circuits or electronic components on the PWB.

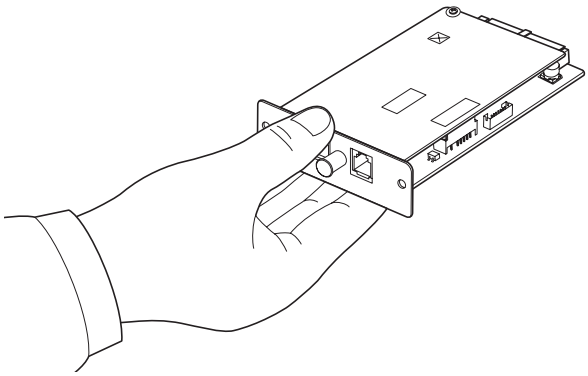

Figure 1-3-48

Procedure

1. On the rear of the machine, remove two screws and then remove the plate.

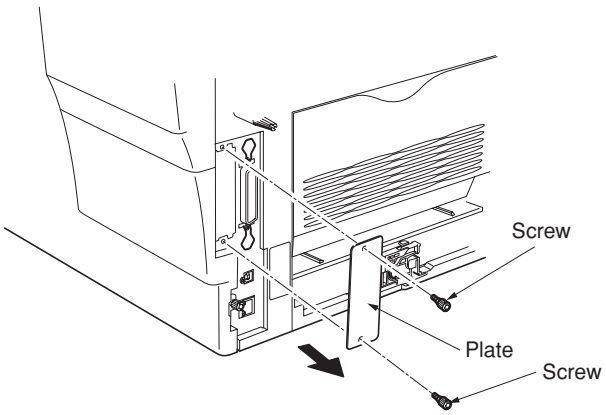

Figure 1-3-49

2. Insert the FAX assembly along the rail in the machine until it clicks in place. Attach the fax assembly using two screws from step 1.
IMPORTANT: When inserting the FAX assembly, slide it slowly and firmly all the way in.

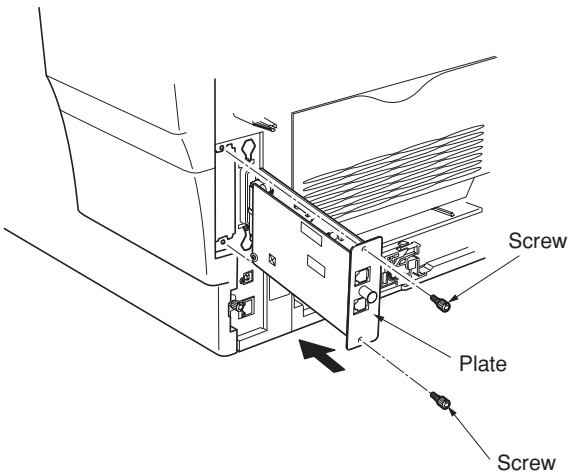

Figure 1-3-50

3. Connect the modular cord to the line jack.
   120 V specifications: Connect the modular cord with the attached ferrite core to the machine.

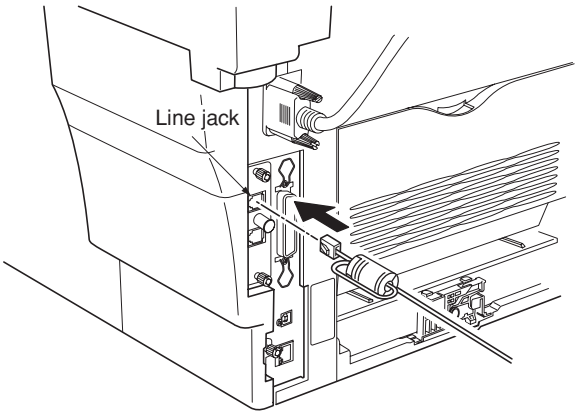

Figure 1-3-51

220-240 V specifications only

4. Attach the core to the power cord of the machine so that the stopper section is located near the power plug as shown in the illustration.

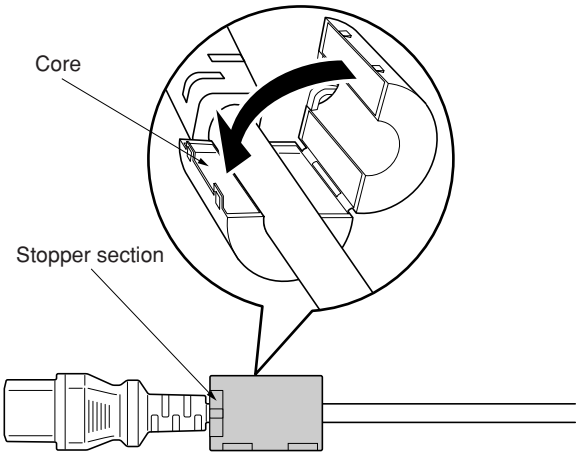

Figure 1-3-52

5. Plug the power cord into the machine. Turn the machine on.
   NOTE (120 V specifications only)
   When connecting a separate phone to the machine, attach the ferrite core to the modular cord before connection. Loop the modular cord through the ferrite core.

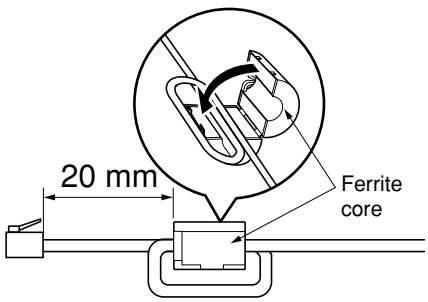

Figure 1-3-53

Initialization procedure after installation of fax system

1. Insert the machine power plug to the wall outlet and turn the power switch on.
2. Run maintenance item U601.
3. Enter a destination code using the numeric keys (refer to the destination code list) and then press the enter key.
   * Enter a destination code with three digits.

Code	Destination	Code	Destination	Code	Destination
000	Japan	159	South Africa	253	Sweden
009	Australia	169	Thailand		France
080	Hong Kong	181	U.S.A.		Austria
084	Indonesia	242	South America		Switzerland
088	Israel	243	Saudi Arabia		Belgium
108	Malaysia	253	CTR21 (European nations)		Denmark
126	New Zealand		Italy		Finland
136	Peru		Germany		Portugal
137	Philippines		Spain		Ireland
152	Middle East		U.K.		Norway
156	Singapore		Netherlands	254	Taiwan

4. Enter the OEM code (000) and then press the enter key.
5. After data initialization, the entered destination, OEM codes and ROM version are displayed. A ROM version displays three kinds, application, IPL, and boot.

```
Ini. Keep data
COMPLETED XXX 000
APLI:****************
BOOT:****************
IPL:****************
```

Figure 1-3-54

6. After completing the installation, run a communications test to confirm that the fax system is working correctly.

1-4-1 Maintenance mode

The machine is equipped with a maintenance function which can be used to maintain and service the machine.

(1) Executing a maintenance item

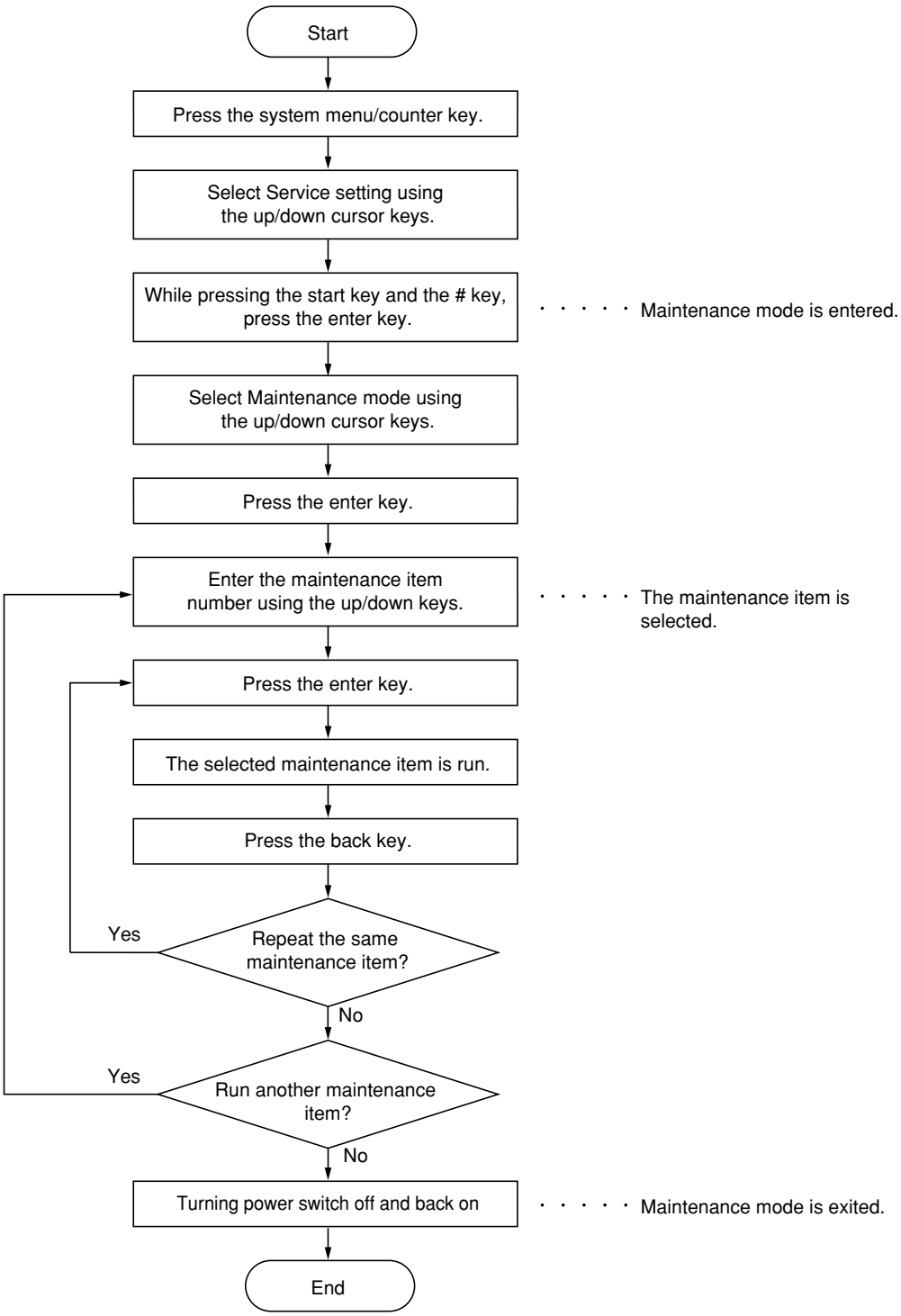

* The test print mode cannot be stopped until the preset number of sheets is printed. To stop the operation, remove the cassette to cause a paper empty state. To terminate the test print mode in the middle of operation, you must turn off the power switch and then on again to exit the maintenance mode.

(2) Maintenance modes

Category	Item No.	Maintenance	Initial setting*
General	U000	Outputting an own-status report	—
Initialization	U020	Initializing all data	—
Drive, paper feed and paper conveying system	U034	Setting paper timing • Adjusting the leading edge registration • Adjusting the center line	 — —
	U051	Adjusting the amount of slack in the paper	0
Optical	U060	Adjusting the scanner input properties	12
	U063	Adjusting the shading position	0
	U065	Adjusting the scanner magnification • Main scanning direction • auxiliary scanning direction	 0 0
	U066	Adjusting the leading edge registration for scanning an original on the contact glass	6
	U067	Adjusting the center line for scanning an original on the contact glass	7
	U070	Adjusting the DP magnification	–2
	U071	Adjusting the DP scanning timing • Adjusting leading edge registration • Adjusting trailing edge registration	 11 0
	U072	Adjusting the DP center line	-0.7
	U074	Adjusting the DP input light luminosity	1
	U087	Turning the DP scanning position adjust mode on/off	35
	U089	Outputting a MIP-PG pattern	—
High voltage	U101	Setting the other high voltages	26/55/48/ 43/24/60
Developing	U130	Initial setting for the developer	OFF
	U144	Setting toner loading operation	1
	U157	Checking/clearing the developing drive time	—
Fusing and cleaning	U161	Setting the fusing control temperature • Primary stabilization fusing temperature • Secondary stabilization fusing temperature • Copying operation temperature 1 • Copying operation temperature 2 • Number of sheets for fusing control	 135 160 190 195 5
	U163	Resetting the fusing problem data	—
Operation panel and support equipment	U203	Operating DP separately	—
	U207	Checking the operation panel keys	—
Mode setting	U260	Changing the copy count timing	—
Image processing	U403	Adjusting margins for scanning an original on the contact glass	—
	U404	Adjusting margins for scanning an original from the DP	—
	U411	Adjusting the scanner automatically	—
	U425	Setting the target	—
Others	U901	Checking/clearing print counts by paper feed locations	—
	U905	Checking/clearing counts by the DP	—
	U911	Checking/clearing print counts by paper size	—
	U927	Clearing accounting counter	—
	U928	Checking/clearing the machine life count	—

* Initial setting for executing maintenance item U020

(3) Contents of maintenance mode items

Maintenance item No.	Description
U000	**Outputting an own-status report**

Description

Outputs lists of the current settings of the maintenance items, and paper jam and service call occurrences and event log report.

Purpose

To check the current setting of the maintenance items, or paper jam or service call occurrences.
Before initializing the backup RAM, output a list of the current settings of the maintenance items to reenter the settings after initialization or replacement.

Method

1. Press the enter key. A selection item appears.
2. Select the item to be output using the up/down cursor keys.

Display	Output list
Maintenance	Outputs the maintenance list
Event Log	Outputs the event log report

3. Press the enter key. The test print mode is entered and a list is output.

Completion

Press the back key while a selection item is displayed. The indication for selecting a maintenance item No. appears.

Detail of event log

Event Log
MFP

Firmware Version 2GM_2000.001.073 2004.12.26

① **Paper Jam Log**

#	Count.	Event Descriptions
1	0	05.43.01.08.01.01

Paper Jam/Printer Main Unit/Paper Late

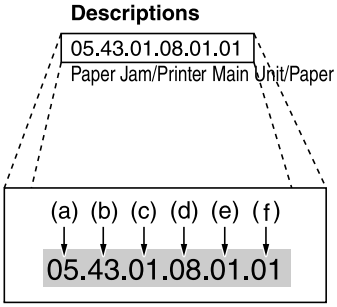

② **Service Call Log**

#	Count.	Service Code
8	9999999	01.80
7	9999998	F4.50
6	9999997	01.80
5	9999996	F4.15
4	9999995	01.80
3	9999994	01.80
2	9999993	01.80
1	9999992	01.80

③ **Maintenance Log**

#	Count.	Item
1	9999999	01.00

④ **Counter Log**

J03:000	J10:000	J20:000	J40:000	J71:000	J7F:000	CF450:001
J04:000	J11:000	J21:000	J50:000	J7A:000	C0180:006	M00:001
J05:001	J12:000	J22:000	J70:000	J7B:000	CF415:001	

Maintenance item No.	Description

Item	Description
① Paper Jam Log	#: Log number 1 to 16 jams are recorded. (If the number of jams exceeds 16, the oldest log is deleted.) Count.: Number of pages Total page counter at the time of jam Event: Log code Six types of two-digit hexadecimal numbers are displayed. Cause of jam/jam position/paper feed location/paper size/media type /ejection location Descriptions: Indicates the description of error
	(a) Cause of jam 03: No paper feed [–] 04: Cover open JAM [–] 05: Secondary paper feed timeout [H] 10: No paper feed from the MP tray [B] 11: No paper feed from the cassette [C] 12: No paper feed from the optional cassette [D] 20: Multiple sheets in the MP tray [B] 21: Multiple sheets in the cassette [C] 22: Multiple sheets in the optional cassette [D] 40: Misfeed in the fusing section [H] 50: Misfeed in the exit section [G] 70: No original feed [P] 71: An original jam in the original conveying section [P] 7A: DP original cover or front top cover open JAM [P] 7B: DP open JAM [P] 7F: Original remaining JAM [P]
	(b) Jam position 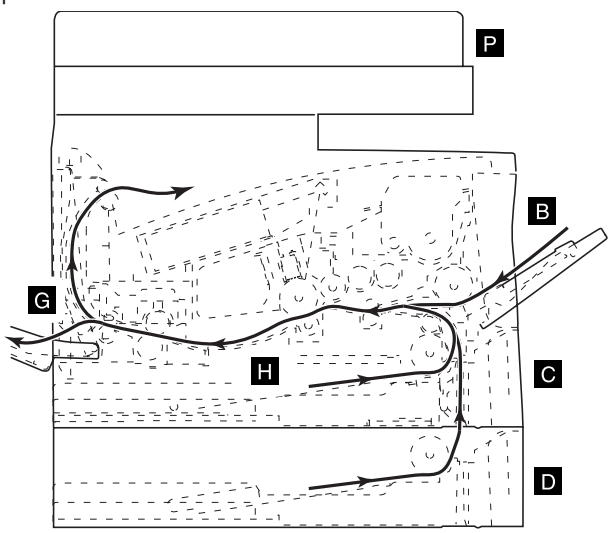 42 [B]: MP tray 43 [C]: Cassette 44 [D]: Optional cassette 47 [G]: Face-up/down eject tray 48 [H]: MFP 50 [P]: DP
	(c) Paper feed location 00: MP tray 01: Cassette 02: Optional cassette

Maintenance item No.	Description

Item	Description
	(c) Paper size 01: Envelope Monarch / 09: B5 / 1F: Postcard 02: Envelope #10 / 0D: A5 / 20: Reply-paid postcard 03: Envelope DL / 0E: A6 / 21: Officio II 04: Envelope C5 / 0F: B6 / 28: 16K 05: Executive / 10: Envelope #9 / 32: Statement 06: Letter / 11: Envelope #6 / 33: Folio 07: Legal / 12: ISO B5 / 34: Western 2 08: A4 / 13: Custom / 35: Western 4
	(d) Media type 01: Plain / 09: Letterhead / 17: Custom 3 02: Transparency / 0A: Color / 18: Custom 4 03: Preprinted / 0B: Prepunched / 19: Custom 5 04: Label / 0C: Envelope / 1A: Custom 6 05: Bond / 0D: Cardstock / 1B: Custom 7 06: Recycled / 10: Thick / 1C: Custom 8 07: Vellum / 15: Custom 1 08: Rough / 16: Custom 2
	(e) Ejection location 01: Face-down output tray
② Service Call Log	#: Log number 1 to 8 service calls are recorded. (If the number of service calls exceeds 8, the oldest log is deleted.) Count.: Number of pages Total page counter at the time of service call Service code: Log code
③ Maintenance Log	#: Log number 1 to 8 maintenance logs are recorded. (If the number of replacement times exceeds 8, the oldest log is deleted.) Count.: Number of pages Total page counter at the time of replacement Item: Log code Two units of 1-byte values indicate a log. First byte 01: Replacement of toner container Second byte 00 : black (fixed)
④ Counter Log	Jam count Counter display by cause of jam Example J05: 001 Jam05 occurred one time. Call system log Counter display by service call Example C0180: 006 C0180 occurred six times. Replacement log Replacement log display by item Example M00: 001 The toner container was replaced one time.

Maintenance item No.	Description
U020	**Initializing all data** **Description** Initializes all the backup RAM on the engine PWB to return to the original settings. **Purpose** Used when replacing backup RAM on the engine PWB. After initialization, run U157 “Changing the developing drive time” and U411 “Adjusting the scanner automatically.” **Method** 1. Press the enter key. A selection item appears. 2. Select Execute using the up/down cursor keys. 3. Press the enter key. All data in the backup RAM is initialized. When initialization is complete, turn the power switch off and on. **Completion** To exit this maintenance item without executing initialization, press the back key. The indication for selecting a maintenance item No. appears.
U034	**Adjusting the print start timing** **Adjustment** See pages 1-6-41 and 42.
U051	**Adjusting the amount of slack in the paper** **Adjustment** See page 1-6-43.
U060	**Adjusting the scanner input properties** **Description** Adjusts the image scanning density. **Purpose** Used when the entire image appears too dark or light. **Method** Press the enter key. **Setting** 1. Change the setting using the left/right cursor keys. Display: γ Adj. (MONO); Description: Image scanning density; Setting range: 0 to 23; Initial setting: 12 Increasing the setting makes the density higher, and decreasing it makes the density lower. 2. Press the enter key. The value is set. **Test print mode** While this maintenance item is being performed, copying from an original can be made in test print mode. 1. Press the system menu/counter key. The machine enters the test print mode. 2. Set the original and press the start key. * The test printing, however, cannot be stopped until the preset number of sheets is printed. 3. To return to the indication for setting, press the system menu/counter key. **Completion** Press the back key. The indication for selecting a maintenance item No. appears.

<table>
<tr><th>Maintenance item No.</th><th>Description</th></tr>
<tr><td>U063</td><td>

Adjusting the shading position

Description
Changes the shading position.

Purpose
Used when white lines continue to appear longitudinally on the image after the shading plate is cleaned. This is due to flaws or stains inside the shading plate. To prevent this problem, the shading position should be changed so that shading is possible without being affected by the flaws or stains.

Method
Press the enter key.

Setting
1. Change the setting using the left/right cursor keys.

Display	Description	Setting range	Initial setting
Adjust Data	Shading position	–5 to +5	0

Increasing the setting moves the shading position toward the machine left, and decreasing it moves the position toward the machine right.
2. Press the enter key. The value is set.

Test print mode
While this maintenance item is being performed, copying from an original can be made in test print mode.
1. Press the system menu/counter key. The machine enters the test print mode.
2. Set the original and press the start key.
   * The test printing, however, cannot be stopped until the preset number of sheets is printed.
3. To return to the indication for setting, press the system menu/counter key.

Completion
Press the back key. The indication for selecting a maintenance item No. appears.

</td></tr>
<tr><td>U065</td><td>

Adjusting the scanner magnification

Adjustment
See pages 1-6-44 and 45.

</td></tr>
<tr><td>U066</td><td>

Adjusting the leading edge registration for scanning an original on the contact glass

Adjustment
See page 1-6-46.

</td></tr>
<tr><td>U067</td><td>

Adjusting the center line for scanning an original on the contact glass

Adjustment
See page 1-6-47.

</td></tr>
<tr><td>U070</td><td>

Adjusting the DP magnification

Adjustment
See page 1-6-49.

</td></tr>
<tr><td>U071</td><td>

Adjusting the DP scanning timing

Adjustment
See pages 1-6-50 and 51.

</td></tr>
<tr><td>U072</td><td>

Adjusting the DP center line

Adjustment
See page 1-6-52.

</td></tr>
</table>

Maintenance item No.	Description
U074	**Adjusting the DP input light luminosity** **Description** Adjusts the luminosity of the exposure lamp for scanning originals from the DP. **Purpose** Used if the exposure amount differs significantly between when scanning an original on the contact glass and when scanning an original from the DP. **Method** Press the enter key. **Setting** 1. Change the setting using the left/right cursor keys. Display: Adjust Data; Description: DP input light luminosity; Setting range: 0 to 8; Initial setting: 1 Increasing the setting makes the luminosity higher, and decreasing it makes the luminosity lower. 2. Press the enter key. The value is set. **Test print mode** While this maintenance item is being performed, copying from an original can be made in test print mode. 1. Press the system menu/counter key. The machine enters the test print mode. 2. Set the original and press the start key. * The test printing, however, cannot be stopped until the preset number of sheets is printed. 3. To return to the indication for setting, press the system menu/counter key. **Completion** Press the back key. The indication for selecting a maintenance item No. appears.
U087	**Turning the DP scanning position adjust mode on/off** **Description** Turns on or off the DP scanning position adjust mode, in which the DP original scanning position is adjusted automatically by determining the presence or absence of dust on the slit glass. Also changes the reference data for identifying dust. **Reference** In the DP original scanning position adjust mode, the presence or absence of dust is determined by comparing the scan data of the original trailing edge and that taken after the original is conveyed past the DP original scanning position. If dust is identified, the DP original scanning position is adjusted for the following originals. **Purpose** Used to prevent appearance of black lines due to dust adhering in the original scanning position on the slit glass when the DP is used. **Method** 1. Press the enter key. A selection item appears. 2. Select the item to be set using the up/down cursor keys. Display: On/Off; Description: Setting the mode on/off Display: Data; Description: Setting the reference data for identifying dust **Setting the mode on/off** 1. Change the setting using the left/right cursor keys. Setting range: OFF/ON; Initial setting: On 2. Press the enter key. The setting is set. **Setting the reference data for identifying dust** Available only when the mode is turned on. 1. Change the setting using the left/right cursor keys. Setting range: 10 to 95; Initial setting: 35 2. Press the enter key. The value is set. **Completion** Press the back key. The indication for selecting a maintenance item No. appears.

Maintenance item No.	Description
U089	**Outputting a MIP-PG pattern**

Description

Selects and outputs a MIP-PG pattern created in the machine.

Purpose

When performing respective image printing adjustments, used to check the machine status apart from that of the scanner with a non-scanned output MIP-PG pattern.

Method

1. Press the enter key. A selection item appears.
2. Select the item to be output using the up/down cursor keys.

Display	Description
Gray Scale	Outputs the gray PG
Mono	Outputs the monochrome PG
256	Outputs the 256-level PG
1dot	Outputs the 1dot PG

3. Press the enter key to enter the selected mode.

Method: Gray PG output or 256-level PG output

1. Press the up/down cursor keys to select the desired item of gradation processing.

Display	Description
Err Diffusion2	2-value error diffusion method
Err Diffusion4	4-value error diffusion method
Dither	Dither matrix method

2. Press the enter key.
3. Press the up/down cursor keys to select whether output of γ is on or off.

Display	Description
γ Off	Output of γ off
γ On	Output of γ on

4. Press the enter key.
5. Press the system menu/counter key. The machine enters the PG pattern output mode.
6. Press the start key. A MIP-PG pattern is output.
7. To return to the indication for setting, press the system menu/counter key.

Method: Monochrome PG output

1. Change the setting using the left/right cursor keys.

Description	Setting range	Initial setting
Monochrome PG output level	0 to 255	70

2. Press the enter key. The value is set.
3. Press the up/down cursor keys to select the desired item of gradation processing.

Display	Description
Err Diffusion2	2-value error diffusion method
Err Diffusion4	4-value error diffusion method
Dither	Dither matrix method

4. Press the enter key.
5. Press the up/down cursor keys to select whether output of γ is on or off.

Display	Description
γ Off	Output of γ off
γ On	Output of γ on

6. Press the enter key.
7. Press the system menu/counter key. The machine enters the PG pattern output mode.
8. Press the start key. A MIP-PG pattern is output.
9. To return to the indication for setting, press the system menu/counter key.

<table>
<tr><th>Maintenance item No.</th><th>Description</th></tr>
<tr><td>U089</td><td>

Method: 1dot PG output

1. Change the setting using the left/right cursor keys.

Description	Setting range	Initial setting
Number of 1dot pattern	1 to 16	1

2. Press the enter key. The value is set.
3. Press the system menu/counter key. The machine enters the PG pattern output mode.
4. Press the start key. A MIP-PG pattern is output.
5. To return to the indication for setting, press the system menu/counter key.

Completion

Press the back key while a selection item is displayed. The indication for selecting a maintenance item No. appears.

</td></tr>
<tr><td>U101</td><td>

Setting the other high voltages

Description

Changes the developing bias clock and the transfer charging output timing.

Purpose

To check the developing bias clock and the transfer charging output timing. Do not change the preset value.

Method

Press the enter key. A selection item appears.

Setting

1. Select the item to be using the up/down cursor keys.
2. Change the setting using the left/right cursor keys.

Display	Description	Setting range	Initial setting
DB_100Hz (CPY)	Developing bias clock frequency	2 to 255	26
DB_Duty% (CPY)	Developing bias clock frequency	1 to 99	55
TC Off [10ms]	Transfer charging output OFF timing	0 to 255	48
TC On [10ms]	Transfer charging output ON timing	0 to 255	43
DB_100Hz (PRT)	Developing bias clock frequency	2 to 255	24
DB_Duty% (PRT)	Developing bias clock duty	1 to 99	60

3. Press the enter key. The value is set.

Completion

Press the back key. The indication for selecting a maintenance item No. appears.

</td></tr>
<tr><td>U130</td><td>

Initial setting for the developer

Description

Executes toner install operation.

Purpose

To operate when replacing the process unit.

Method

1. Press the enter key. A selection item appears.
2. Select On using the up/down cursor keys.
3. Press the enter key.
4. Turning the power switch off and back on.
   ADDING TONER is displayed and installation of toner starts.
5. After approximately 15 minutes, the installation is completed and the machine becomes ready.

Completion

Press the back key. The indication for selecting a maintenance item No. appears.

</td></tr>
</table>

<table>
<tr><th>Maintenance item No.</th><th>Description</th></tr>
<tr><td>U144</td><td>
Setting toner loading operation
Description
Sets toner loading operation.
Purpose
To run when drum filming (background blur in paper edge section) occurs.
Method
Press the enter key.
Setting
1. Change the setting using the left/right cursor keys.
<table>
<tr><th>Setting value</th><th>Description</th></tr>
<tr><td>0
1</td><td>Toner not loaded
Toner loaded</td></tr>
</table>
Initial setting: 1
2. Press the enter key. The setting is set.
Completion
Press the back key. The indication for selecting a maintenance item No. appears.
</td></tr>
<tr><td>U157</td><td>
Checking/clearing the developing drive time
Description
Displays the developing drive time for checking or changing a figure.
Purpose
To enter the developing drive time again after carrying out initialization with U020 and to clear the developing drive time when replacing process unit.
Method
1. Press the enter key. The developing drive time is displayed in minutes.
2. Change the setting using the left/right cursor keys or numeric keys.
Setting range: 0 to 99999
To clear the developing drive time, set the value to 0.
3. Press the enter key. The value is set.
Completion
Press the back key. The indication for selecting a maintenance item No. appears.
</td></tr>
</table>

Maintenance item No.	Description
U161	**Setting the fusing control temperature** **Description** Changes the fusing control temperature. **Purpose** Normally no change is necessary. However, can be used to prevent curling or creasing of paper, or solve a fusing problem on thick paper. **Method** Press the enter key. A selection item appears. **Setting** 1. Select the item to be set using the up/down cursor keys. 2. Change the setting using the left/right cursor keys. **Display** / **Description** / **Setting range** / **Initial setting** First Temp. / Primary stabilization fusing temperature / 100 to 165 (°C) / 135 Second Temp. / Secondary stabilization fusing temperature / 100 to 165 (°C) / 160 Copy Temp. 1 / Printing operation temperature 1 / 160 to 220 (°C) / 190 Copy Temp. 2 / Printing operation temperature 2 / 160 to 220 (°C) / 195 Temp. 1 Cont. # / Number of sheets for fusing control / 1 to 99 / 5 Printing operation temperature 1: Temperature in printing operation at the start of printing Printing operation temperature 2: Temperature in printing operation after the specified number of sheets for fusing control have passed Number of sheets for fusing control: The number of sheets to be counted for switching from printing operation temperature 1 to printing operation temperature 2 The temperatures are to be set such that Secondary stabilization ≧ Primary stabilization. 3. Press the enter key. The value is set. **Completion** Press the back key. The indication for selecting a maintenance item No. appears.
U163	**Resetting the fusing problem data** **Description** Resets the detection of a service call code indicating a problem in the fusing section. When a service call concerning the fusing section occurs, turn the power switch off and open the front cover. Then, turn the power switch on and press the system menu/counter key to enter the maintenance mode. **Purpose** To prevent accidents due to an abnormally high fusing temperature. **Method** 1. Press the enter key. A selection item appears. 2. Select Execute using the up/down cursor keys. 3. Press the enter key. The fusing problem data is initialized. (Four service calls, namely C6000, C6020, C6050, and C6400 are reset.) **Completion** Press the back key. The indication for selecting a maintenance item No. appears.

<table>
<tr><th>Maintenance item No.</th><th>Description</th></tr>
<tr><td>U203</td><td>

Operating DP separately

Description
Simulates the original conveying operation separately in the DP.

Purpose
To check the DP.

Method
1. Press the enter key. A selection item appears.
2. Select the item to using the up/down cursor keys.

Display	Operation
DP	With paper
DP (Non P)	Without paper (continuous operation)

3. Press the start key. The operation starts.
   * When operation with paper is selected, if no original is set in the DP, this mode cannot be run. When operation without paper is selected, if originals are set in the DP, this mode cannot be run.
4. To stop continuous operation, press the stop/clear key.

Completion
Press the back key when the operation stops. The indication for selecting a maintenance item No. appears.

</td></tr>
<tr><td>U207</td><td>

Checking the operation panel keys

Description
Checks operation of the operation panel keys.

Purpose
To check operation of all the keys and LEDs on the operation panel.

Method
1. Press the enter key.
2. 01 appears and the leftmost LED on the operation panel lights.
3. As the keys on the operation panel are pressed in order from the left to right, the figure shown increases in increments of 1. If there is an LED corresponding to the key pressed, the LED will light.
4. When all keys are pressed, all LEDs will light for 10 s.

Completion
Press the stop/clear key. The indication for selecting a maintenance item No. appears.

</td></tr>
<tr><td>U260</td><td>

Changing the copy count timing

Description
Changes the copy count timing for the total counter and other counters.

Purpose
To be set according to user (copy service provider) request.
If a paper jam occurs frequently in the eject section when the number of copies is counted at the time of paper ejection, copies are provided without copy counts. The copy service provider cannot charge for such copying. To prevent this, the copy timing should be made earlier.
If a paper jam occurs frequently in the paper conveying or fusing sections when the number of copies is counted before the paper reaches those sections, copying is charged without a copy being made. To prevent this, the copy timing should be made later.

Method
Press the enter key. A selection item appears.

Setting
1. Select the copy count timing using the up/down cursor keys.

Display	Description
Feed	When secondary paper feed starts
Eject	When the paper is ejected

2. Press the enter key. The setting is set.

Completion
Press the back key. The indication for selecting a maintenance item No. appears.

</td></tr>
</table>

Maintenance item No.	Description
U403	**Adjusting margins for scanning an original on the contact glass** **Adjustment** See page 1-6-48.
U404	**Adjusting margins for scanning an original from the DP** **Adjustment** See page 1-6-53.
U411	**Adjusting the scanner automatically** **Description** Uses the original for adjustment (P/N: 2A668011) to carry out the automatic adjustment of scanner (scanner center line adjustment, scanner leading edge registration adjustment, magnification of the scanner in the auxiliary scanning direction adjustment, monochrome/color input γ adjustment, and color correction). **Purpose** To run after replacing the engine PWB, ISU unit, exposure lamp or platen glass (shading plate). Before carrying out automatic adjustment, input the target values using U425 “Setting the target.” **Method** 1. Run U425 “Setting the target” to input the target values. 2. Set the original to be used for adjustment on the platen. 3. Set five or six sheets of blank paper on the original for adjustment that has been set. 4. Press the enter key. A selection item appears. 5. Select Execute using the up/down cursor keys. 6. Press the enter key. Adjustment is carried out. * Do not turn the power switch OFF or open/close the cover (turning the safety switch OFF/ON) before automatic adjustment is complete. 7. If the adjustment is successful, OK is displayed. If not, NG is displayed. * If NG is displayed, set the original for adjustment properly again, gently close the original cover, and then carry out the adjustment again. **Completion** Press the back key. The indication for selecting a maintenance item No. appears.

Maintenance item No.	Description
U425	**Setting the target**

Description

When running U411 “Adjusting the scanner automatically,” input the color data value of the specified patch written in the LAB value table on the back side of the original for adjustment (P/N: 2A668011). Note that incorrect value input results in improper automatic adjustment.

Purpose

To run before running U411 “Adjusting the scanner automatically.”

Method

Press the enter key. A selection item appears.

Setting

1. Select the item to be set using the up/down cursor keys.
2. Change the setting using the left/right cursor keys or keypad.
   * Input the values written in the LAB value table on the back side of the original.

Display	Description	Setting range
N8.75(L*) N8.75(a*) N8.75(b*)	Black N8.75 (L*) target Black N8.75 (a*) target Black N8.75 (b*) target	0.0 to +100.0 –200.0 to +200.0 –200.0 to +200.0
N4.75(L*) N4.75(a*) N4.75(b*)	Black N4.75 (L*) target Black N4.75 (a*) target Black N4.75 (b*) target	0.0 to +100.0 –200.0 to +200.0 –200.0 to +200.0
N1.25(L*) N1.25(a*) N1.25(b*)	Black N1.25 (L*) target Black N1.25 (a*) target Black N1.25 (b*) target	0.0 to +100.0 –200.0 to +200.0 –200.0 to +200.0
C(L*) C(a*) C(b*)	Cyan (L*) target Cyan (a*) target Cyan (b*) target	0.0 to +100.0 –200.0 to +200.0 –200.0 to +200.0
M(L*) M(a*) M(b*)	Magenta (L*) target Magenta (a*) target Magenta (b*) target	0.0 to +100.0 –200.0 to +200.0 –200.0 to +200.0
Y(L*) Y(a*) Y(b*)	Yellow (L*) target Yellow (a*) target Yellow (b*) target	0.0 to +100.0 –200.0 to +200.0 –200.0 to +200.0
R(L*) R(a*) R(b*)	Red (L*) target Red (a*) target Red (b*) target	0.0 to +100.0 –200.0 to +200.0 –200.0 to +200.0
G(L*) G(a*) G(b*)	Green (L*) target Green (a*) target Green (b*) target	0.0 to +100.0 –200.0 to +200.0 –200.0 to +200.0
B(L*) B(a*) B(b*)	Blue (L*) target Blue (a*) target Blue (b*) target	0.0 to +100.0 –200.0 to +200.0 –200.0 to +200.0

3. Press the enter key. The value is set.

Completion

Press the back key. The indication for selecting a maintenance item No. appears.

<table>
<tr><th>Maintenance item No.</th><th>Description</th></tr>
<tr><td>U901</td><td>
Checking/clearing print counts by paper feed locations
Description
Displays or clears print counts by paper feed locations.
Purpose
To check the time to replace consumable parts. Also to clear the counts after replacing the consumable parts.
Method
1. Press the enter key. The print count will be displayed for each paper feed location.
<table>
<tr><th>Display</th><th>Paper source</th></tr>
<tr><td>Bypass
Cassette 1
Cassette 2
All Clear</td><td>MP tray
Cassette
Optional cassette
Clearing all counts</td></tr>
</table>
2. Select the paper feed location to clear the count using the up/down cursor keys. To clear all counts, select All Clear.
3. Press the enter key. The count is cleared.
Completion
Press the back key. The indication for selecting a maintenance item No. appears.
</td></tr>
<tr><td>U905</td><td>
Checking/clearing counts by the DP
Description
Displays the counts of the DP.
Purpose
To check the use of the optional DP.
Method
Press the enter key. The count will be displayed.
To clear the count, press the enter key.
Completion
Press the back key. The indication for selecting a maintenance item No. appears.
</td></tr>
<tr><td>U911</td><td>
Checking/clearing print counts by paper size
Description
Displays or clears the paper feed count value by paper size.
Purpose
To check the time to replace consumable parts. Also to clear the counts after replacing the consumable parts.
Method
1. Press the enter key. The paper feed counts by paper size will be displayed.
2. Select the paper size to clear the count using the up/down cursor keys. To clear all counts, select All Clear.
3. Press the enter key. The count is cleared.
Completion
Press the back key. The indication for selecting a maintenance item No. appears.
</td></tr>
</table>

Maintenance item No.	Description
U927	**Clearing accounting counter** **Description** Clears the total count, scanner count and machine life count. The counts, however, can be cleared only one time. If either of the total count, canner count or machine life count exceeds 1,000, this mode cannot be run. **Purpose** To start the counters with value 0 when installing the machine. **Method** 1. Press the enter key. A selection item appears. 2. Select Execute using the up/down cursor keys. * If the counter has been cleared, Execute is not displayed. 3. Press the enter key. The accounting counter is cleared. **Completion** Press the back key. The indication for selecting a maintenance item No. appears.
U928	**Checking the machine life count** **Description** Displays the machine life count for checking a figure. **Purpose** To check machine status. **Method** Press the enter key. The machine life count will be displayed **Completion** Press the back key. The indication for selecting a maintenance item No. appears.

1-4-2 System settings

In addition to a maintenance function, the machine is equipped with a system settings which can be operated by users (mainly by the machine administrator). In this machine system settings, default settings can be changed.

(1) Executing a system setting item

• Executing a system setting item

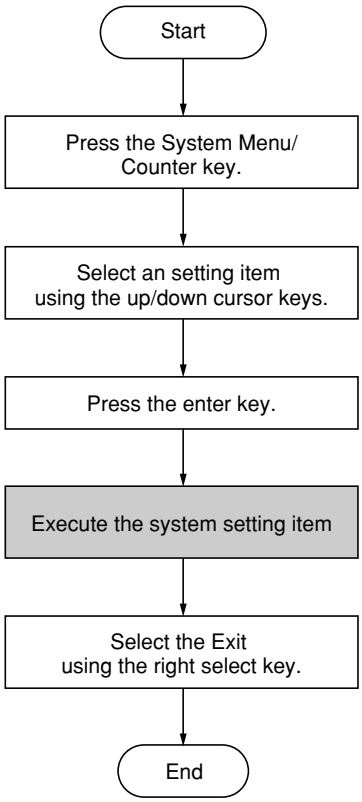

(2) System settings

Adjusting the contrast of the message display

1. Select Adjust and press the enter key.
2. Select LCD Contrast and press the enter key.
3. Select the desired contrast and press the enter key.

Selecting the message language

1. Select Common Setting and press the enter key.
2. Select Language and press the enter key.
3. Select the language to be used in the message display and press the enter key.

Setting the default operation mode

1. Select Common Setting and press the enter key.
2. Select Default Operat. and press the enter key.
3. Select the desired default operation mode and press the enter key.

Setting the unit of measurement

1. Select Common Setting and press the enter key.
2. Select Measurement and press the enter key.
3. Select either Inch or mm and press the enter key.

Adjusting the copy exposure for the original quality modes

1. Select Adjust and press the enter key.
2. Select Copy Expo. Adj. and press the enter key.
3. Select the original quality mode and press the enter key.
4. Select the desired copy exposure and press the enter key.

Turning black-line correction ON/OFF

1. Select Adjust and press the enter key.
2. Select Scan Noise Reduc and press the enter key.
3. Select either On or Off and press the enter key.

Setting the photo processing method

1. Select Copy Setting and press the enter key.
2. Select Photo Processing” and press the enter key.
3. Select the desired processing method and press the enter key.

Resetting the toner status

1. Select Common Setting and press the enter key.
2. Select Toner Setting and press the enter key.
3. Select Toner Gauge Rset and press the enter key.
4. Select either Yes or No.

Changing the function defaults

1. Select Function Default and press the enter key.
2. Select the default setting and press the enter key.
3. Select the new default setting and press the enter key.

Registering destination E-mail addresses under one-touch keys

1. Select Common Setting and press the enter key.
2. Select One Touch Keys and press the enter key.
3. Select the number of the one-touch and press the enter key.
4. Select E-mail and press the enter key.
5. Enter or revise the e-mail address and then press the enter key.

Restarting the machine

1. Select System Setting and press the enter key.
2. Select Restart and press the enter key.
3. Select either Yes or No.

Turning individual alarms ON/OFF and/or adjusting the alarm volume

1. Select Common Setting and press the enter key.
2. Select Sound Setting and press the enter key.
3. Select Buzzer and press the enter key.
4. Select Volume and press the enter key.
5. Select the desired volume for the alarms and press the enter key.
6. Select the desired alarm and press the enter key.
7. Select either On or Off and press the enter key.

Setting the date and time

1. Select Date/Timer Set. and press the enter key.
2. Select Year/Time and press the enter key.
3. Register the current year, month and day.
4. Press the enter key.
5. Register the current hour, minute and second.
6. Press the enter key.

Setting the date format

1. Select Date/Timer Set. and press the enter key.
2. Select Date Format and press the enter key.
3. Select the desired date format.

Setting the time zone

1. Select Date/Timer Set. and press the enter key.
2. Select Time Zone and press the enter key.
3. Select the time zone and press the enter key.

Turning the summer time setting ON/OFF

1. Select Date/Timer Set. and press the enter key.
2. Select Summer Time and press the enter key.
3. Select either On or Off and press the enter key.

Setting of the panel reset time

1. Select Date/Timer Set. and press the enter key.
2. Select Auto Panel Reset and press the enter key.
3. Select either On or Off and press the enter key.

Setting of the reset time

1. Select Date/Timer Set. and press the enter key.
2. Select Reset Timer and press the enter key.
3. Register the current reset timer and press the enter key.

Setting the low power time

1. Select Date/Timer Set. and press the enter key.
2. Select Low Power Timer and press the enter key.
3. Select the desired time for the low power mode to engage and press the enter key.

Setting of the sleep time

1. Select Date/Timer Set. and press the enter key.
2. Select Auto sleep and press the enter key.
3. Select either On or Off and press the enter key.

Setting of the sleep timer

1. Select Date/Timer Set. and press the enter key.
2. Select Sleep Timer and press the enter key.
3. Select the desired time for the sleep mode to engage and press the enter key.

Setting the auto continue recovery time

1. Select Date/Timer Set. and press the enter key.
2. Select Auto Err. Clear and press the enter key.
3. Select either On or Off and press the enter key.

Setting of the error clear time

1. Select Date/Timer Set. and press the enter key.
2. Select Err. Clear Timer and press the enter key.
3. Select the desired recovery time and press the enter key.

Registering custom original paper sizes

1. Select Common Setting and press the enter key.
2. Select Orig./Paper Set. and press the enter key.
3. Select Custom Orig. Size and press the enter key.
4. Select Custom and press the enter key.
5. Select the width of the original to be registered, and press the enter key.
6. Select the height of the original to be registered, and press the enter key.

Registering custom paper sizes

1. Select Common Setting and press the enter key.
2. Select Orig./Paper Set. and press the enter key.
3. Select Custom PaperSize, and press the enter key.
4. Select Custom and press the enter key.
5. Select the height of copy paper to be registered and press the enter key.
6. Select the width of copy paper to be registered and press the enter key.

Setting defalt original size

1. Select Common Setting and press the enter key.
2. Select Orig./Paper Set. and press the enter key.
3. Select Def. Org. Size and press the enter key.
4. Select the desired size and press the enter key.

Registering the paper size and type for cassettes

1. Select Common Setting and press the enter key.
2. Select Orig./Paper Set. and press the enter key.
3. Select Cassette1(2) Set. and press the enter key.
4. Select Cassette1(2) Size and press the enter key.
5. Select the size of paper and press the enter key.
6. Select Cassette1(2) Type and press the enter key.
7. Select the type of paper and press the enter key.
8. Select Back and press the enter key.

Registering the paper size and type for the MP tray

1. Select Common Setting and press the enter key.
2. Select Orig./Paper Set. and press the enter key.
3. Select MP Tray Set. and press the enter key.
4. Select MP Tray Size and press the enter key.
5. Select the size of paper and press the enter key.
6. Select MP Tray Type and press the enter key.
7. Select the type of paper and press the enter key.
8. Select Back and press the enter key.

Creating a custom paper type

1. Select Common Setting and press the enter key.
2. Select Orig./Paper Set. and press the enter key.
3. Select Media Type Adj. and press the enter key.
4. Select the type of paper or select one of the custom settings and press the enter key.
5. Select the desired paper weight and press the enter key.
6. Select the desired printing exposure and press the enter key.
7. Enter the desired name for this custom paper type and press the enter key.

Selecting the paper feed location

1. Select Common Setting and press the enter key.
2. Select Orig./Paper Set. and press the enter key.
3. Select Def. Paper Input and press the enter key.
4. Select the paper feed location and press the enter key.

Designating the APS (Auto Paper Selection) paper type

1. Select Copy Setting and press the enter key.
2. Select APS Media Type and press the enter key.
3. Select the type of paper that will be used in the APS mode and press the enter key.

1-4-3 Service settings

The machine is equipped with a service settings which can be operated by service person.

(1) Executing a service setting item

¥ Executing a system setting item

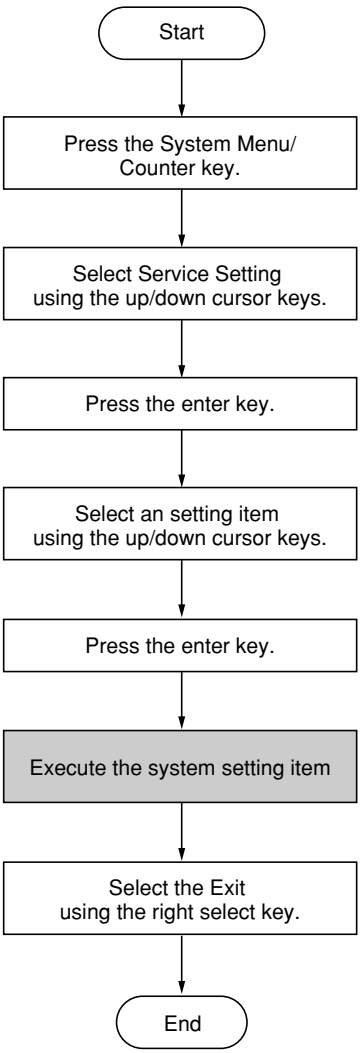

(2) Contents of service setting items

Service items	Description
Ser. Status Page	**Printing a status page for service purpose** **Description** Prints a status page for service purpose. The status page includes various printing settings and service cumulatives. **Procedure** 1.Select [Ser. Status Page] using up/down cursor keys and press the enter key. 2.Select [Yes] using the left select key. Service status pages (2 pages) are output. **Detail of service status page** 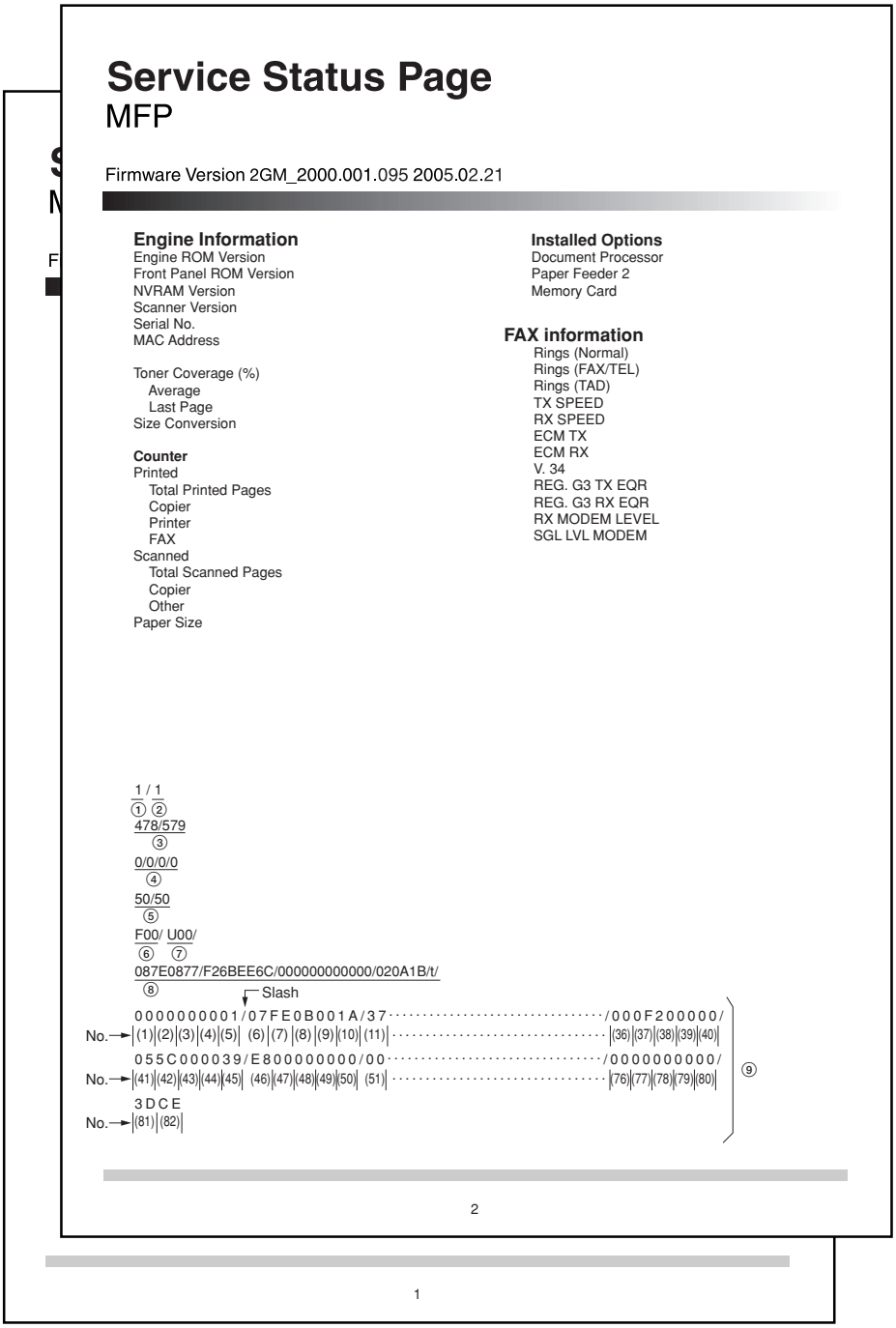 *[FAX Information] is only printed when the optional fax system is installed in the machine.

Service items	Description

	Items	Description
①	Destination information	1: For Europe/Australia/New Zealand 2: For America/Canada/South America 3: For Europe/Middle East/Asia 17/18/19/21: OEM
②	Area information	1: Europe 2: North America 3: Asia (except Chine) 4: Japan 5: Australia 6: China
③	Printable area	Legth/Width
④	Offset for each paper source	MP tray top offset/MP tray left offset/Optional drawer top offset/Optional drawer left offset
⑤	Margin	Top margin/Left margin
⑥	Operation panel key lock status	0: Off 1: Partial lock (cancelling job is available) 2: Full lock (displayed only)
⑦	USB information	0: Not installed 1: Full speed 2: Hi-speed
⑧	Engine information (Hexadecimal)	Monochirome AGC offset odd result, Monochirome AGC offset odd setting value, Monochirome AGC offset even result, Monochirome AGC offset even setting value/ Monochirome AGC gain odd result, Monochirome AGC gain odd setting value, Monochirome AGC gain even result, Monochirome AGC gain even setting value/ Color AGC offset red result, Color AGC offset red setting value, Color AGC offset green result, Color AGC offset green setting value, Color AGC offset blue result, Color AGC offset blue setting value/ Color AGC gain red result, Color AGC gain red setting value, Color AGC gain green result, Color AGC gain green setting value, Color AGC gain blue, Color AGC gain blue setting value/ Lamp stabilization parameter A, B, C/ Toner installation mode/
⑨	Maintenance information (Hexadecimal)	

No.	Data Description
1	Amount of slack in the paper: Drawer
2	MP tray
3	Optional drawer
4	Shading position
5	Scanner magnification
6	Print start timing
7	DP magnification
8	DP scanning timing: Leading edge
9	Trailing edge
10	Other high voltages: Developing bias clock frequency
11	Developing bias clock frequency
12	Transfer charging output OFF timing
13	Transfer charging output ON timing
14	Developing bias clock frequency
15	Developing bias clock duty

Service items	Description

	Items	Description
⑨	Maintenance information (Hexadecimal)	

No.	Data Description
16	Initial setting for the developer
17	Setting toner loading operation
18	Developing drive time (most significant byte)
19	(secod byte)
20	(third byte)
21	(least significant byte)
22	Fusing control temperature: Primary stabilization fusing temperature
23	Secondary stabilization fusing temperature
24	Printing operation temperature 1
25	Printing operation temperature 2
26	Number of sheets for fusing control
27	Paper location counter: MP tray counter (most significant byte)
28	(secod byte)
29	(third byte)
30	(least significant byte)
31	Drawer counter (most significant byte)
32	(secod byte)
33	(third byte)
34	(least significant byte)
35	Optional drawer counter (most significant byte)
36	(secod byte)
37	(third byte)
38	(least significant byte)
39	DP counter (most significant byte)
40	(secod byte)
41	(third byte)
42	(least significant byte)
43	Paper size counter: A4 size (most significant byte)
44	(secod byte)
45	(third byte)
46	(least significant byte)
47	B5 size (most significant byte)
48	(secod byte)
49	(third byte)
50	(least significant byte)
51	A5 size (most significant byte)
52	(secod byte)
53	(third byte)
54	(least significant byte)
55	A6 size (most significant byte)
56	(secod byte)
57	(third byte)
58	(least significant byte)
59	Folio size (most significant byte)
60	(secod byte)
61	(third byte)
62	(least significant byte)
63	8½" × 14" size (most significant byte)
64	(secod byte)
65	(third byte)
66	(least significant byte)

Service items	Description

	Items	Description
⑨	Maintenance information (Hexadecimal)	

No.	Data Description
67	Paper size counter: 8½" × 11" size (most significant byte)
68	(secod byte)
69	(third byte)
70	(least significant byte)
71	5½" × 8½" size (most significant byte)
72	(secod byte)
73	(third byte)
74	(least significant byte)
75	Other size (most significant byte)
76	(secod byte)
77	(third byte)
78	(least significant byte)
79	Machine life counter (most significant byte)
80	(secod byte)
81	(third byte)
82	(least significant byte)

Service items	Description
NW Status Page	**Printing a status page for network** **Description** Prints a status page that lists information on the network settings. **Procedure** 1. Select [NW Status Page] using up/down cursor keys and press the enter key. 2. Select [Yes] using the left select key. Network status pages (3 pages) are output. **Sample of network status page**

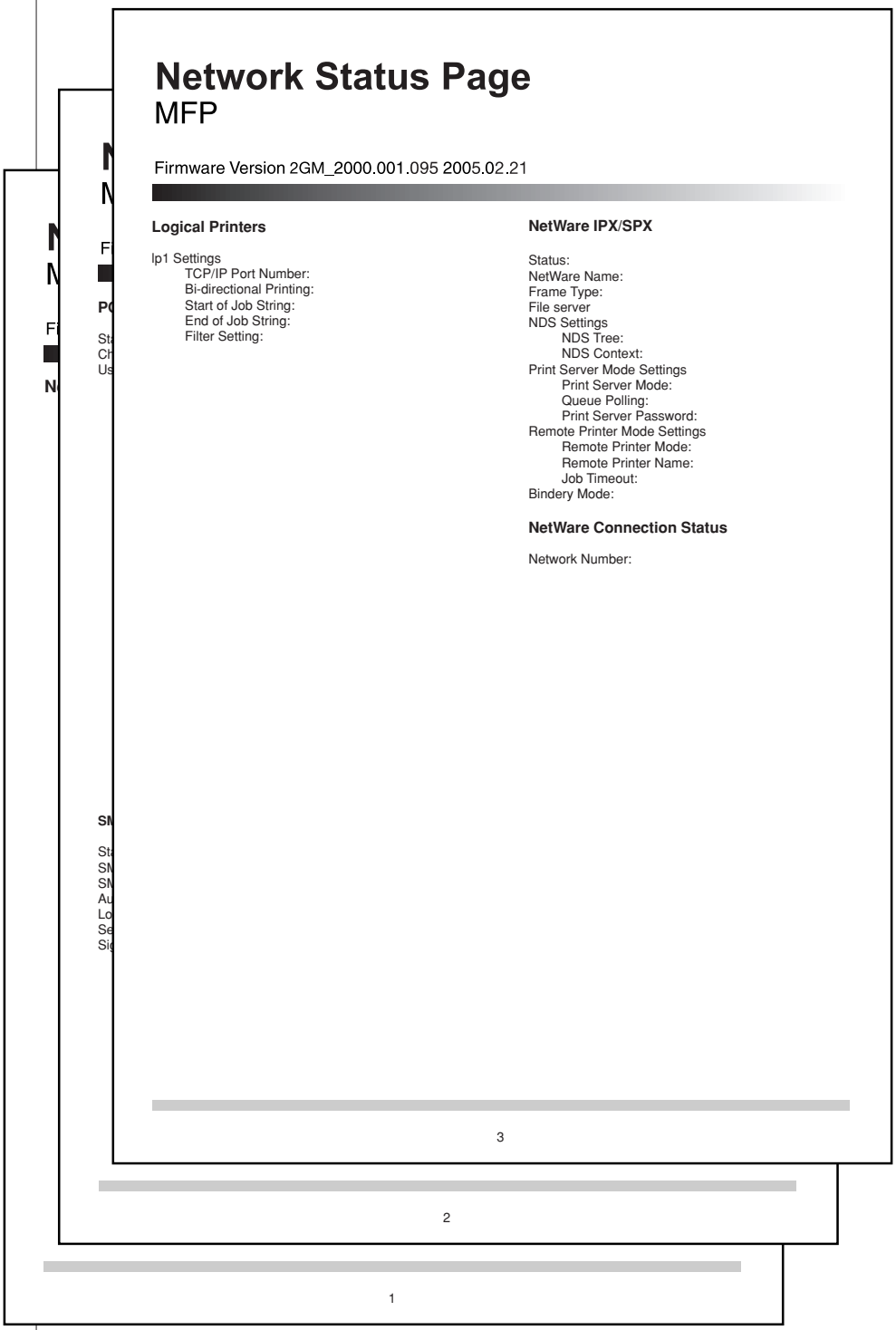

Network Status Page
MFP

Firmware Version 2GM_2000.001.095 2005.02.21

Logical Printers

lp1 Settings
TCP/IP Port Number:
Bi-directional Printing:
Start of Job String:
End of Job String:
Filter Setting:

NetWare IPX/SPX

Status:
NetWare Name:
Frame Type:
File server
NDS Settings
NDS Tree:
NDS Context:
Print Server Mode Settings
Print Server Mode:
Queue Polling:
Print Server Password:
Remote Printer Mode Settings
Remote Printer Mode:
Remote Printer Name:
Job Timeout:
Bindery Mode:

NetWare Connection Status

Network Number:

3

2

1

Service items	Description
New Developer	**Toner installation mode** **Description** Executes toner install operation when replacing the toner. **Procedure** 1. Select [New Developer] using up/down cursor keys and press the enter key. 2. Select [Yes] using the left select key. 3. [Completed] is displayed and set the toner install mode. 4. Turning the power switch off and back on. [Adding Toner] is displayed at the time of the next power switch on, and toner installation operation is executed.. After approximately 15 minutes, the installation is completed and the machine becomes ready.
Drum Refresh	**Drum surface refreshing** **Description** To clean the drum surface when image failure occurs due to contamination. This mode is useful when dew condensation on the drum occurs. **Procedure** 1. Select [Drum Refresh] using cursor up/down keys and press the enter key. 2. Select [Yes] using the left select key. Drum surface refreshing will start and finish after approximately 2 minutes.
Transport mode	**Transport mode** **Description** Follow the instructions below to reinstall the transport pin before moving the machine. **Procedure** 1. Select [Transport mode] using cursor up/down keys and press the enter key. 2. Select [Yes] using the left select key. The mirror frame of the scanner returns to the position for transport. 3. Check that [Turn power off.] is displayed and turn the power switch off. 4. Open the front top cover and front cover. 5. Remove the transport pin from the front cover. 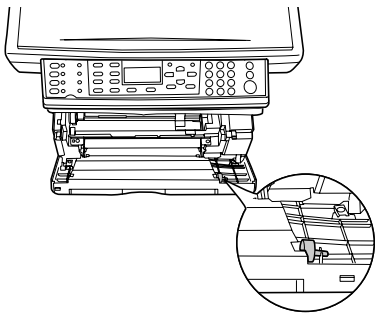 **Figure 1-4-1** 6. Refit the pin as shown in the figure. 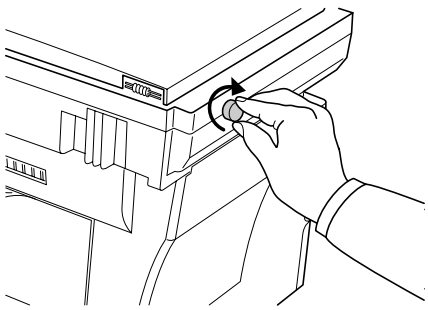 **Figure 1-4-2** 7. Close the front top cover and front cover.

Service items	Description
FAX Country Code	**Setting the FAX destination code** Note: This setting is only available when the optional fax system is installed in the machine. **Description** To set the fax destination code. Basically, the setting need not be changed. **Procedure** 1. Select [FAX Country Code] using up/down cursor keys and press the enter key. 2. Enter the country code using the numeric keys.
Remote Diag. Set	**Setting the FAX remote diagnosis system** Note: This setting is only available when the optional fax system is installed in the machine. **Description** Set to take advantage of our remote diagnosis system. **Procedure** 1. Select [Remote Diag. Set] using up/down cursor keys and press the enter key. 2. Select [Off] or [On] using the up/down cursor keys and press the enter key.
Remote Diag. ID	**Entering the FAX remote ID number** Note: This setting is only available when the optional fax system is installed in the machine. **Description** Register the designated remote test ID for remote diagnosis. In order to perform the remote diagnosis, it needs to be set as On by setting the FAX remote diagnosis system. **Procedure** 1. Select [Remote Diag. ID] using cursor up/down keys and press the enter key. 2. Enter a 4-digit ID using the numeric keys.

1-5-1 Paper misfeed detection

(1) Paper misfeed indication

When a paper misfeed occurs, the machine immediately stops copying or printing and displays the jam location on the operation panel.
To remove paper jammed in the machine, open the face-up output tray, front top cover, front cover or pull the cassette out.
To remove original jammed in the optional DP, open the DP original cover.
Paper misfeed detection can be reset by opening and closing the respective covers to turn interlock switch off and on.

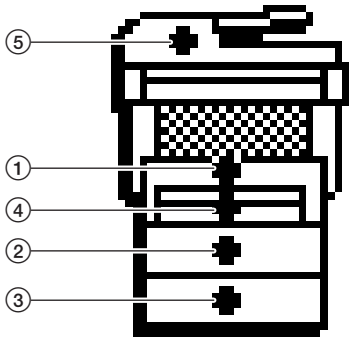

Figure 1-5-1

① Misfeed inside the machine
② Misfeed in the cassette
③ Misfeed in the optional cassette
④ Misfeed in the MP tray
⑤ Misfeed in the optional DP

(2) Paper misfeed detection conditions

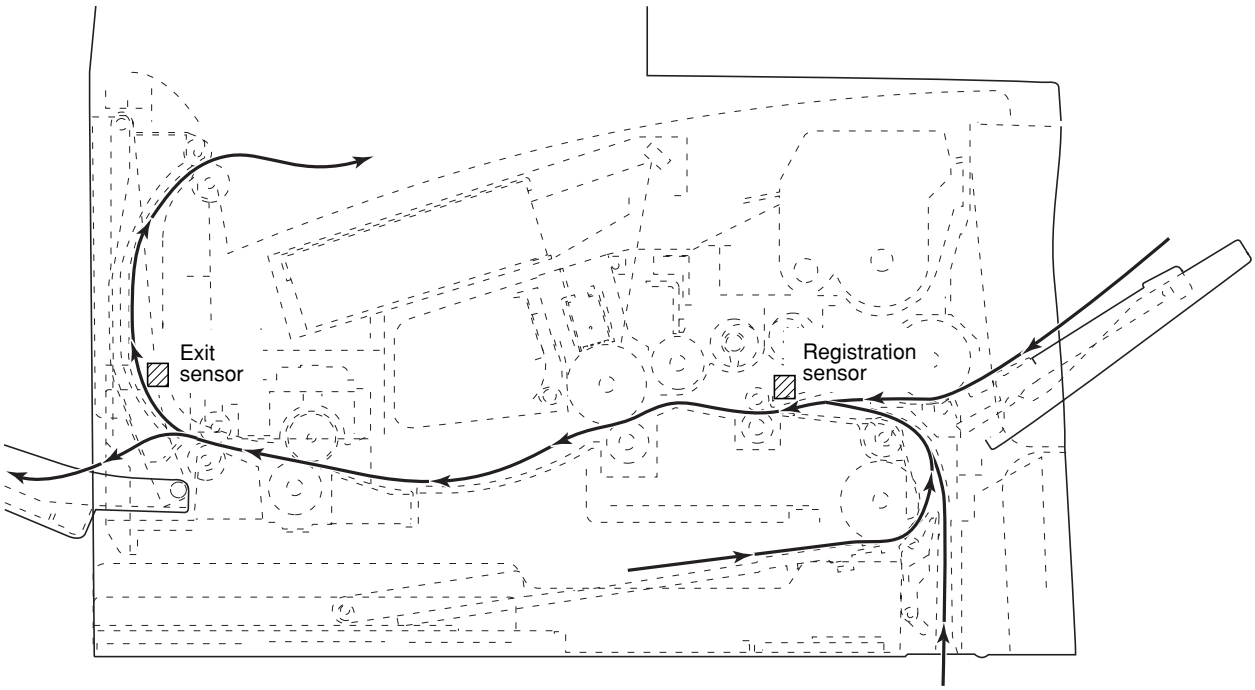

Figure 1-5-2

Section	Jam code	Description	Conditions
System	03	No paper feed	When the power switch is turned on or front top cover is closed, the machine detects activation of the registration sensor or the exit sensor.
	04	Cover open JAM	A cover open state is detected during copying or printing.
	05	Secondary paper feed timeout	When the machine waits for secondary paper feed, 15 s or more have elapsed.
Paper feed section	10	No paper feed from the MP tray	The registration sensor does not turn on within 1350 ms of the MP feed clutch turning on; the clutch is then successively turned off for 1 s and turned back on once, but the sensor again fails to turn on within 1350 ms.
	11	No paper feed from the cassette	The registration sensor does not turn on within 1120 ms of the feed clutch turning on; the clutch is then successively turned off for 1 s and turned back on once, but the sensor again fails to turn on within 1120 ms.
	12	No paper feed from the optional cassette	The registration sensor does not turn on within 1160 ms of the feed clutch turning on; the clutch is then successively turned off for 1 s and turned back on once, but the sensor again fails to turn on within 1160 ms.
	20	Multiple sheets in the MP tray	The registration sensor does not turn off within 5055 ms of the registration clutch turning on (when paper is fed from the MP tray).
	21	Multiple sheets in the cassette	The registration sensor does not turn off within 5055 ms of the registration clutch turning on (when paper is fed from the cassette).
	22	Multiple sheets in the optional cassette	The registration sensor does not turn off within 5055 ms of the registration clutch turning on (when paper is fed from the optional cassette).
Fusing section	40	Misfeed in the fusing section	The exit sensor does not turn on within 2765 ms of the registration clutch turning on.
Exit section	50	Misfeed in the exit section	The exit sensor does not turn off within 2765 ms of the registration sensor turning off.
DP (option)	70	No original feed	When the power switch is turned on, the machine detects activation of the DP timing switch.
			The machine cannot detect activation of the DP timing switch even after 1350 ms elapses since the start of primary paper feed and cannot detect it at the same timing even after 5 times of retry.
	71	An original jam in the original conveying section	The machine cannot detect deactivation of the DP timing switch even after 4227 ms elapses since the start of secondary paper feed.
			The machine detects deactivation of the DP timing switch even after 909 ms elapses since the start of secondary paper feed.
	7A	DP original cover or front top cover open JAM	The machine detects opening of the DP original cover or the front top cover while scanning originals.
	7B	DP open JAM	The machine detects opening of the DP while scanning originals.
	7F	Original remaining JAM	When the machine starts scanning of originals, the DP timing switch is on.

(3) Paper misfeeds

• Main body

Problem	Causes/check procedures	Corrective measures
(1) A paper jam in the conveying, fusing or exit section is indicated as soon as the power switch is turned on. Jam code 03	A piece of paper torn from paper is caught around registration sensor or exit sensor.	Check visually and remove it, if any.
	Defective registration sensor.	Check if YC8-7 on the engine PWB remains low when the registration sensor is turned on and off. If it does, replace the registration sensor.
	Defective exit sensor.	Check if YC7-7 on the engine PWB remains low when the exit sensor is turned on and off. If it does, replace the exit sensor.
(2) A paper jam in the paper feed section is indicated during copying or printing (no paper feed from the MP tray). Jam code 10	Paper on the MP tray is extremely curled.	Change the paper.
	Check if the MP feed roller is deformed.	Check visually and replace any deformed roller.
	Defective registration sensor.	Check if YC8-7 on the engine PWB remains low when the registration sensor is turned on and off. If it does, replace the registration sensor.
	Check if the MP feed clutch malfunctions.	Check and remedy if necessary.
	Electrical problem with the MP feed clutch.	Check.
(3) A paper jam in the paper feed section is indicated during copying or printing (no paper feed from the cassette). Jam code 11	Paper in the cassette is extremely curled.	Change the paper.
	Check if the feed roller is deformed.	Check visually and replace any deformed roller.
	Defective registration sensor.	Check if YC8-7 on the engine PWB remains low when the registration sensor is turned on and off. If it does, replace the registration sensor.
	Check if the feed clutch malfunctions.	Check and remedy if necessary.
	Electrical problem with the feed clutch.	Check.
(4) A paper jam in the paper feed section is indicated during copying or printing (no paper feed from the optional cassette). Jam code 12	Paper in the optional cassette is extremely curled.	Change the paper.
	Check if the feed roller of the optional cassette is deformed.	Check visually and replace any deformed roller.
	Defective registration sensor.	Check if YC8-7 on the engine PWB remains low when the registration sensor is turned on and off. If it does, replace the registration sensor.
	Check if the feed clutch malfunctions.	Check and remedy if necessary.
	Electrical problem with the feed clutch.	Check.

Problem	Causes/check procedures	Corrective measures
(5) A paper jam in the paper feed section is indicated during copying or printing (multiple sheets in the MP tray). Jam code 20	Check if the MP feed roller is deformed.	Check visually and replace any deformed roller.
	Defective registration sensor.	Check if YC8-7 on the engine PWB remains low when the registration sensor is turned on and off. If it does, replace the registration sensor.
	Check if the registration clutch malfunctions.	Check and remedy if necessary.
	Electrical problem with the registration clutch.	Check.
(6) A paper jam in the paper feed section is indicated during copying or printing (multiple sheets in the cassette). Jam code 21	Check if the feed roller is deformed.	Check visually and replace any deformed roller.
	Defective registration sensor.	Check if YC8-7 on the engine PWB remains low when the registration sensor is turned on and off. If it does, replace the registration sensor.
	Check if the registration clutch malfunctions.	Check and remedy if necessary.
	Electrical problem with the registration clutch.	Check.
(7) A paper jam in the paper feed section is indicated during copying or printing (multiple sheets in the optional cassette). Jam code 22	Check if the feed roller of the optional cassette is deformed.	Check visually and replace any deformed roller.
	Defective registration sensor.	Check if YC8-7 on the engine PWB remains low when the registration sensor is turned on and off. If it does, replace the registration sensor.
	Check if the registration clutch malfunctions.	Check and remedy if necessary.
	Electrical problem with the registration clutch.	Check.
(8) A paper jam in the fusing section is indicated during copying or printing (jam in the fusing section). Jam code 40	Defective exit sensor.	Check if YC7-7 on the engine PWB remains low when the exit sensor is turned on and off. If it does, replace the exit sensor.
	Check if the registration clutch malfunctions.	Check and remedy if necessary.
	Electrical problem with the registration clutch.	Check.
	Check if the upper and lower registration rollers contact each other.	Check visually and remedy if necessary.
	Check if the lower exit roller and exit pulleys contact each other.	Check visually and remedy if necessary.
	Check if the press roller is extremely dirty or deformed.	Clean or replace if necessary.
	Check if the separators are dirty or deformed.	Clean or replace if necessary.

Problem	Causes/check procedures	Corrective measures
(9) A paper jam in the exit section is indicated during copying or printing (jam in the exit section). Jam code 50	Defective registration sensor.	Check if YC8-7 on the engine PWB remains low when the registration sensor is turned on and off. If it does, replace the registration sensor.
	Defective exit sensor.	Check if YC7-7 on the engine PWB remains low when the exit sensor is turned on and off. If it does, replace the exit sensor.
	Check if the lower exit roller and exit pulleys contact each other.	Check visually and remedy if necessary.
	Check if the upper exit roller and exit pulleys contact each other.	Check visually and remedy if necessary.

• **DP**

Problem	Causes/check procedures	Corrective measures
(1) An original jams when the power switch is turned on.	A piece of paper torn from an original is caught around the DP timing switch.	Remove any found.
	Defective DP timing switch.	Check if YC10-6 on the engine PWB remains low when the DP timing switch is turned on and off. If it does, replace the DP timing switch.
(2) An original jams in the DP is indicated during copying (no original feed). Jam code 70	Defective DP timing switch.	Check if YC10-6 on the engine PWB remains low when the DP timing switch is turned on and off. If it does, replace the DP timing switch.
	Check if the forwarding pulley or feed pulley is deformed.	Check visually and replace the deformed pulley.
(3) An original jams in the DP during copying (a jam in the original conveying section). Jam code 71	Defective DP timing switch.	Check if YC10-6 on the engine PWB remains low when the DP timing switch is turned on and off. If it does, replace the DP timing switch.
	Check if the conveying roller or exit roller is deformed.	Check visually and replace the deformed roller.
(4) Original jams frequently.	An original outside the specifications is used.	Use only originals conforming to the specifications.
	The forwarding pulley or feed pulley is dirty with paper powder.	Clean with isoproply alcohol.
	The conveying roller and conveying pulleys do not contact correctly.	Check and remedy.
	The exit roller and exit pulleys do not contact correctly.	Check and remedy.

1-5-2 Self-diagnosis

(1) Self-diagnostic function

This unit is equipped with a self-diagnostic function. When a problem is detected, copying is disabled. C and a number between 0030 and 7990 altenates, indicating the nature of the problem.
After removing the problem, the self-diagnostic function can be reset by turning interlock switch off and back on.

(2) Self diagnostic codes

Code	Contents	Remarks	
		Causes	Check procedures/corrective measures
C0030	**Fax control PWB system problem** • Processing with the optional fax software was disabled due to a hardware or software problem.	Defective fax control PWB.	Replace the fax control PWB and check for correct operation.
C0070	**Fax control PWB incompatibility detection problem** • Optional fax software is not compatible with main software.	Fax software or main software is something of the other machine.	Check the version of the Fax software and the main software, upgrade the version to the compatible software.
C0150	**Backup memory read/write problem (engine PWB)** • Read and write data does not match.	Defective backup RAM or engine PWB.	Replace the engine PWB and check for correct operation.
C0160	**Backup memory data problem (engine PWB)** • Data in the specified area of the backup memory does not match the specified values.	Problem with the backup memory data.	Turn interlock switch off and back on and run maintenance item U020 to set the contents of the backup memory data again.
		Defective backup RAM.	If the C0160 is displayed after re-setting the backup memory contents, replace the backup RAM or engine PWB.
C0170	**Accounting count problem** • When the power is turned on, the total count and the scan count are abnormal both on the main PWB and the engine PWB.	Defective main PWB or engine PWB.	Replace the main PWB or engine PWB and check for correct operation.
C0180	**Machine number mismatch** • When the power is turned on, the machine number does not match between the main PWB and the engine PWB.	Defective main PWB or engine PWB.	Replace the main PWB or engine PWB and check for correct operation.
C0210	**Communication problem between the main PWB and engine PWB** • When the power is turned on, the machine does not detect the low level of SBSY and the high level of SDIR for three seconds.	Poor contact in the connector terminals.	Check the connection of connectors YC7 on the main PWB and YC3 on the engine PWB, and the continuity across the connector terminals. Repair or replace if necessary.
		Defective main PWB or engine PWB.	Replace the main PWB or engine PWB and check for correct operation.

Code	Contents	Remarks	
		Causes	Check procedures/corrective measures
C0220	**Communication problem between the main PWB and operation PWB** • There is no reply after 20 retries at communication.	Poor contact in the connector terminals.	Check the connection of connectors YC13 on the main PWB and YC3 on the operation PWB, and the continuity across the connector terminals. Repair or replace if necessary.
		Defective main PWB or operation PWB.	Replace the main PWB or operation PWB and check for correct operation.
C0280	**Communication problem between the fax control PWB and main PWB** • Communication between the fax control PWB and the main PWB of the machine cannot be performed normally.	Poor contact in the connector terminals.	Check the connection of connector YC1 on the fax control PWB and the connector YC1 on the main PWB. Repair or replace if necessary.
		Defective main PWB or fax control PWB.	Replace the main PWB or fax control PWB and check for correct operation.
C0800	**Image processing problem** • JAM05 is detected twice.	Defective engine PWB.	Replace the engine PWB and check for correct operation.
C0830	**Flash ROM program area checksum error** • A checksum error occurred with the program of the optional fax control PWB.	Defective fax control PWB.	Replace the fax control PWB and check for correct operation.
C0870	**Fax control PWB to main PWB high-capacity data transfer problem** • High-capacity data transfer between the optional fax control PWB and the main PWB of the machine was not normally performed even if the data transfer was retried the specified times.	Poor contact in the connector terminals.	Check the connection of connector YC1 on the fax control PWB and YC1 on the main PWB, and the continuity across the connector terminals. Repair or replace if necessary.
		Defective fax control PWB or main PWB.	Replace the fax control PWB or main PWB and check for correct operation.
C0880	**Fax control PWB program archive problem** • When power is turned on, the compressed program in the Flash ROM on the optional fax control PWB was not successfully decompressed.	Defective fax control PWB.	Replace the fax control PWB and check for correct operation.
C0920	**Fax file system error** • The backup data is not retained for file system abnormality of flash memory of the optional fax control PWB.	Defective fax control PWB.	Replace the fax control PWB and check for correct operation.

Code	Contents	Remarks	
		Causes	Check procedures/corrective measures
C2000	**Main motor problem** • LOCK ALM signal remains high for 1 s, 1 s after the main motor has turned on.	Poor contact in the main motor connector terminals.	Reinsert the connector. Also check for continuity within the connector cable. If none, remedy or replace the cable.
		Defective main motor rotation control circuit.	Replace the main motor.
		Defective drive transmission system.	Check if the rollers and gears rotate smoothly. If not, grease the bushings and gears. Check for broken gears and replace if any.
C3100	**Scanner carriage problem** • The home position is not correct when the power is turned on or copying the document placed on the contact glass.	Poor contact of the connector terminals.	Check the connection of connectors YC10, 11 on the engine PWB and the continuity across the connector terminals. Repair or replace if necessary.
		Defective scanner home position sensor.	Replace the scanner home position sensor.
		Defective engine PWB or scanner PWB.	Replace the engine PWB or scanner PWB and check for correct operation.
		Defective scanner motor.	Replace the scanner motor.
C3200	**Exposure lamp problem** • In indicator check before starting copying, the average value in scanning of the shading plate with the CCD is 128 or more.	Defective scanner PWB.	Replace the scanner PWB and check for correct operation.
		Defective exposure lamp or inverter PWB.	Replace the exposure lamp or inverter PWB.
		Incorrect shading position.	Adjust the position of the contact glass (shading plate). If the problem still occurs, replace the scanner home position sensor.
		Poor contact of the connector terminals.	Check the connection of connector YC7 on the scanner PWB, and the continuity across the connector terminals. Repair or replace if necessary.

Code	Contents	Remarks	
		Causes	Check procedures/corrective measures
C4000	**Polygon motor synchronization problem** • The polygon motor does not reach the stable speed within 15 s of the START signal turning on.	Poor contact in the polygon motor connector terminals.	Reinsert the connector. Also check for continuity within the connector cable. If none, remedy or replace the cable.
		Defective polygon motor.	Replace the LSU.
		Defective engine PWB (KP-5238).	Replace the engine PWB and check for correct operation.
C4010	**Polygon motor steady-state problem** • The polygon motor rotation is not stable for 5 s after the polygon motor rotation has been stabilized.	Poor contact in the polygon motor connector terminals.	Reinsert the connector. Also check for continuity within the connector cable. If none, remedy or replace the cable.
		Defective polygon motor.	Replace the LSU.
		Defective engine PWB (KP-5238).	Replace the engine PWB and check for correct operation.
C6000	**Broken fusing heater wire** • In fusing warm-up, the time to reach 50 °C/122 °F exceeds 13.5 s, the time to reach 100 °C/212 °F exceeds 10 s, the time to reach the primary stabilization exceeds 10 s or the time to reach the secondary stabilization exceeds 24 s.	Poor contact in the thermistor connector terminals.	Check the connection of connector YC4 on the power supply PWB and the continuity across the connector terminals. Repair or replace if necessary.
		Thermistor installed incorrectly.	Check and reinstall if necessary.
		Thermal cutout triggered.	Check for continuity. If none, replace the thermal cutout.
		Heater lamp installed incorrectly.	Check and reinstall if necessary.
		Broken heater lamp wire.	Check for continuity. If none, replace the heater lamp.
C6020	**Abnormally high fusing unit thermistor temperature** • The fusing temperature exceeds 230 °C/446 °F for 40 ms.	Shorted thermistor.	Measure the resistance. If it is 0 Ω, replace the thermistor.
		Broken heater control circuit on the power supply PWB.	Replace the power supply PWB and check for correct operation.

Code	Contents	Remarks	
		Causes	Check procedures/corrective measures
C6050	**Abnormally low fusing unit thermistor temperature** • The fusing temperature remains below 90°C/194°F for 1 s.	Poor contact in the thermistor connector terminals.	Check the connection of connector YC4 on the power supply PWB and the continuity across the connector terminals. Repair or replace if necessary.
		Broken thermistor wire.	Measure the resistance. If it is ∞ Ω, replace the thermistor.
		Thermistor installed incorrectly.	Check and reinstall if necessary.
		Thermal cutout triggered.	Check for continuity. If none, replace the thermal cutout.
		Heater lamp installed incorrectly.	Check and reinstall if necessary.
		Broken heater lamp wire.	Check for continuity. If none, replace the heater lamp.
C6400	**Zero-crossing signal problem** • The engine PWB does not detect the zero-crossing signal for the time specified below. At power-on: 3 s Others: 5 s	Poor contact in the connector terminals.	Check the connection of connectors YC7 on the engine PWB and YC2 on the power supply PWB, and the continuity across the connector terminals. Repair or replace if necessary.
		Defective power supply PWB.	Check if the zero-crossing signal is output from YC2-11 on the power supply PWB. If not, replace the power supply PWB.
		Defective engine PWB.	Replace the engine PWB if C6400 is detected while YC2-11 on the power supply PWB outputs the zero-crossing signal.
C7800	**Broken external temperature thermistor** • The input voltage is 0.5 V or less.	Poor contact in the operation PWB connector terminals.	Reinsert the connector. Also check for continuity within the connector cable. If none, remedy or replace the cable.
		Defective external temperature thermistor.	Replace the operation PWB and check for correct operation.
C7810	**Short-circuited external temperature thermistor** • The input voltage is 4.5 V or more.	Poor contact in the operation PWB connector terminals.	Reinsert the connector. Also check for continuity within the connector cable. If none, remedy or replace the cable.
		Defective external temperature thermistor.	Replace the operation PWB and check for correct operation.

Code	Contents	Remarks	
		Causes	Check procedures/corrective measures
C7980	**Waste toner reservoir overflow problem (when the total number of copies is less than 100 thousand sheets)** • After E31 is displayed, 1,000 sheets are copied. Or waste toner exceeds 5 g.	Defective waste toner sensor or engine PWB.	Shake the process unit from side to side and turn the power switch off and then on. If the problem cannot be solved, replace the process unit. After replacing the process unit, turn the power switch off and then on. If the problem cannot be solved, replace the waste toner sensor or the engine PWB.
C7990	**Waste toner reservoir overflow problem (when the total number of copies is 100 thousand sheets or more)** • After E31 is displayed, 1,000 sheets are copied. Or waste toner exceeds 5 g.	Defective waste toner sensor or engine PWB.	Shake the process unit from side to side and turn the power switch off and then on. If the problem cannot be solved, replace the process unit. After replacing the process unit, turn the power switch off and then on. If the problem cannot be solved, replace the waste toner sensor or the engine PWB.
CF- - -	**Controller system error** • After Call for Service person is indicated, the error can be cleared by turning the power switch off and then on.	Defective main PWB.	If this error occurs again even after the power switch is turned off and then on again, replace the main PWB and check for correct operation.
CF010	**ROM checksum error** • After Call for Service person is indicated, the error can be cleared by turning the power switch off and then on.	Defective main PWB.	If this error occurs again even after the power switch is turned off and then on again, contact the Service Administrative Division.
CF012	**ROM checksum error** • After Call for Service person is indicated, the error can be cleared by turning the power switch off and then on.	Defective main PWB.	If this error occurs again even after the power switch is turned off and then on again, contact the Service Administrative Division.
CF1--	**Controller system error**	Defective main PWB.	If this error occurs again even after the power switch is turned off and then on again, contact the Service Administrative Division.
CF2--	**Controller system error**	Defective main PWB.	If this error occurs again even after the power switch is turned off and then on again, contact the Service Administrative Division.
CF3--	**Controller system error**	Defective main PWB.	If this error occurs again even after the power switch is turned off and then on again, contact the Service Administrative Division.
CF4--	**Controller system error**	Defective main PWB.	If this error occurs again even after the power switch is turned off and then on again, contact the Service Administrative Division.

Code	Contents	Remarks	
		Causes	Check procedures/corrective measures
CF5--	**Controller system error**	Defective main PWB.	If this error occurs again even after the power switch is turned off and then on again, contact the Service Administrative Division.
CF6--	**Controller system error**	Defective main PWB.	If this error occurs again even after the power switch is turned off and then on again, contact the Service Administrative Division.
CF7--	**Controller system error**	Defective main PWB.	If this error occurs again even after the power switch is turned off and then on again, contact the Service Administrative Division.
CF8--	**Controller system error**	Defective main PWB.	If this error occurs again even after the power switch is turned off and then on again, contact the Service Administrative Division.

1-5-3 Image formation problems

(1) No image appears (entirely white).

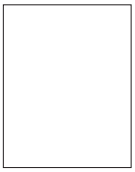

See page 1-5-16

(2) No image appears (entirely black).

See page 1-5-16

(3) Image is too light.

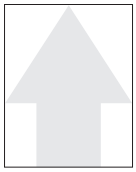

See page 1-5-17

(4) Background is visible.

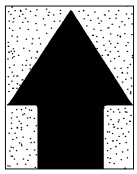

See page 1-5-17

(5) A white line appears longitudinally.

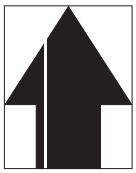

See page 1-5-17

(6) A black line appears longitudinally.

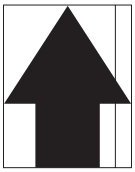

See page 1-5-18

(7) A black line appears laterally.

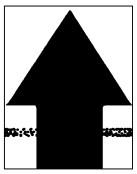

See page 1-5-18

(8) One side of the print image is darker than the other.

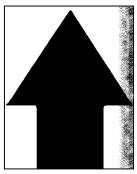

See page 1-5-18

(9) Black dots appear on the image.

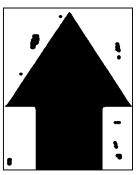

See page 1-5-19

(10) Image is blurred.

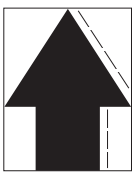

See page 1-5-19

(11) The leading edge of the image is consistently misaligned with the original.

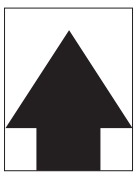

See page 1-5-19

(12) Paper creases.

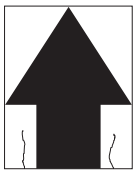

See page 1-5-20

(13) Offset occurs.

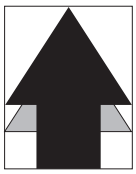

See page 1-5-20

(14) Image is partly missing.

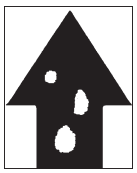

See page 1-5-20

(15) Fusing is poor.

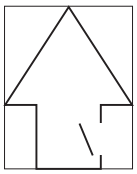

See page 1-5-21

(16) Image center does not align with the original center.

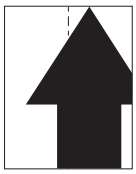

See page 1-5-21

(1) No image appears (entirely white).

Causes
1. No transfer charging.

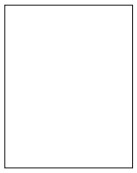

Causes	Check procedures/corrective measures
1. No transfer charging.	
A. The connector terminals of the high voltage PWB make poor contact.	Reinsert the connector. Also check for continuity within the connector cable. If none, remedy or replace the cable.
B. Defective engine PWB.	Replace the engine PWB and check for correct operation.
C. Defective high voltage PWB.	Replace the high voltage PWB and check for correct operation.

(2) No image appears (entirely black).

Causes
1. No main charging.
2. Exposure lamp fails to light.

Causes	Check procedures/corrective measures
1. No main charging.	
A. Broken main charger wire.	Replace the process unit.
B. Leaking main charger housing.	Replace the process unit.
C. The connector terminals of the high voltage PWB make poor contact.	Reinsert the connector. Also check for continuity within the connector cable. If none, remedy or replace the cable.
D. Defective engine PWB.	Replace the engine PWB and check for correct operation.
E. Defective high voltage PWB.	Replace the high voltage PWB and check for correct operation.
2. Exposure lamp fails to light.	
A. The connector terminals of the exposure lamp make poor contact.	Reinsert the connector. Also check for continuity within the connector cable. If none, remedy or replace the cable.
B. Defective CCD PWB.	Replace the CCD PWB and check for correct operation.
C. Defective scanner PWB.	Replace the scanner PWB and check for correct operation.
D. Defective engine PWB.	Replace the engine PWB and check for correct operation.

(3) Image is too light.

Causes
1. Insufficient toner.
2. Deteriorated developer.
3. Dirty or deteriorated drum.

Causes	Check procedures/corrective measures
1. Insufficient toner.	If the add toner indicator lights, replace the toner container.
2. Deteriorated developer.	Replace the process unit.
3. Dirty or deteriorated drum.	Replace the process unit.

(4) Background is visible.

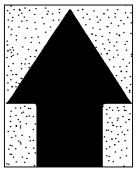

Causes
1. Deteriorated developer.

Causes	Check procedures/corrective measures
1. Deteriorated developer.	Replace the process unit.

(5) A white line appears longitudinally.

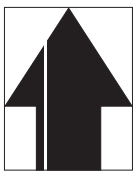

Causes
1. Dirty or flawed main charger wire.
2. Foreign matter in the developing section.
3. Flawed drum.
4. Dirty shading plate.

Causes	Check procedures/corrective measures
1. Dirty or flawed main charger wire.	Replace the process unit.
2. Foreign matter in the developing section.	Replace the process unit.
3. Flawed drum.	Replace the process unit.
4. Dirty shading plate.	Clean the shading plate.

(6) A black line appears longitudinally.

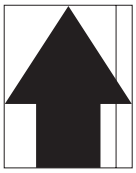

Causes
1. Dirty contact glass.
2. Dirty or flawed drum.
3. Deformed or worn cleaning blade.
4. Dirty scanner mirror.

Causes	Check procedures/corrective measures
1. Dirty contact glass.	Clean the contact glass.
2. Dirty or flawed drum.	Replace the process unit.
3. Deformed or worn cleaning blade.	Replace the process unit.
4. Dirty scanner mirror.	Clean the scanner mirror.

(7) A black line appears laterally.

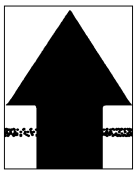

Causes
1. Flawed drum.
2. Dirty developing section.
3. Leaking main charger housing.

Causes	Check procedures/corrective measures
1. Flawed drum.	Replace the process unit.
2. Dirty developing section.	Replace the process unit.
3. Leaking main charger housing.	Replace the process unit.

(8) One side of the print image is darker than the other.

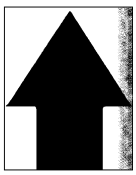

Causes
1. Dirty main charger wire.
2. Defective exposure lamp.

Causes	Check procedures/corrective measures
1. Dirty main charger wire.	Replace the process unit.
2. Defective exposure lamp.	Check if the exposure lamp light is distributed evenly. If not, replace the exposure lamp (see page 1-6-34).

(9) Black dots appear on the image.

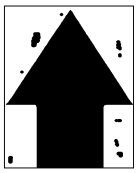

Causes
1. Dirty or flawed drum.
2. Dirty contact glass.
3. Deformed or worn cleaning blade.

Causes	Check procedures/corrective measures
1. Dirty or flawed drum.	Replace the process unit.
2. Dirty contact glass.	Clean the contact glass.
3. Deformed or worn cleaning blade.	Replace the process unit.

(10) Image is blurred.

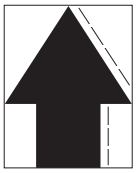

Causes
1. Deformed press roller.
2. Paper conveying section drive problem.

Causes	Check procedures/corrective measures
1. Deformed press roller.	Replace the press roller (see page 1-6-26).
2. Paper conveying section drive problem.	Check the gears and belts and, if necessary, grease them.

(11) The leading edge of the image is consistently misaligned with the original.

Causes
1. Misadjusted leading edge registration.
2. Misadjusted scanner leading edge registration.

Causes	Check procedures/corrective measures
1. Misadjusted leading edge registration.	Readjust the leading edge registration (see page 1-6-41).
2. Misadjusted scanner leading edge registration.	Readjust the scanner leading edge registration (see page 1-6-46).

(12) Paper creases.

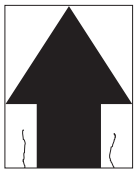

Causes
1. Paper curled.
2. Paper damp.

Causes	Check procedures/corrective measures
1. Paper curled.	Check the paper storage conditions.
2. Paper damp.	Check the paper storage conditions.

(13) Offset occurs.

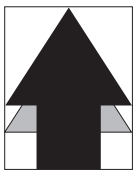

Causes
1. Defective cleaning blade.

Causes	Check procedures/corrective measures
1. Defective cleaning blade.	Replace the process unit.

(14) Image is partly missing.

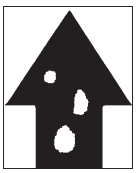

Causes
1. Paper damp.
2. Paper creased.
3. Flawed drum.

Causes	Check procedures/corrective measures
1. Paper damp.	Check the paper storage conditions.
2. Paper creased.	Replace the paper.
3. Flawed drum.	Replace the process unit.

(15) Fusing is poor.

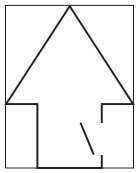

Causes
1. Wrong paper.
2. Flawed press roller.

Causes	Check procedures/corrective measures
1. Wrong paper.	Check if the paper meets specifications.
2. Flawed press roller.	Replace the press roller (see page 1-6-26).

(16) Image center does not align with the original center.

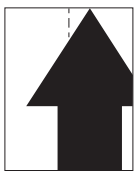

Causes
1. Misadjusted center line of image printing.
2. Misadjusted scanner center line.
3. Original placed incorrectly.

Causes	Check procedures/corrective measures
1. Misadjusted center line of image printing.	Readjust the center line of image printing (see page 1-6-42).
2. Misadjusted scanner center line.	Readjust the scanner center line (see page 1-6-47).
3. Original placed incorrectly.	Place the original correctly.

1-5-4 Electrical problems

Problem	Causes	Check procedures/corrective measures
(1) The machine does not operate when the power switch is turned on.	No electricity at the power outlet.	Measure the input voltage.
	The power cord is not plugged in properly.	Check the contact between the power plug and the outlet.
	The front cover is not closed completely.	Check the front cover.
	Broken power cord.	Check for continuity. If none, replace the cord.
	Defective power switch.	Check for continuity across the contacts. If none, replace the power switch.
	Blown fuse in the power supply PWB.	Check for continuity. If none, remove the cause of blowing and replace the fuse.
	Defective interlock switch.	Check for continuity across the contacts of switch. If none, replace the switch.
	Defective power supply PWB.	With AC present, check for 24 V DC at YC2-6 and 5 V DC at YC2-1 on the power supply PWB. If none, replace the power supply PWB.
(2) The main motor does not operate (C2000).	Poor contact in the main motor connector terminals.	Reinsert the connector. Also check for continuity within the connector cable. If none, remedy or replace the cable.
	Broken main motor gear.	Check visually and replace the main motor if necessary.
	Defective main motor.	Check if the main motor operates and replace the main motor if necessary.
	Defective engine PWB.	Check if YC4-9 on the engine PWB go low when the main motor is operated. If not, replace the engine PWB.
(3) The scanner motor does not operate.	Broken scanner motor coil.	Check for continuity across the coil. If none, replace the scanner motor.
	Poor contact in the scanner motor connector terminals.	Reinsert the connector. Also check for continuity within the connector cable. If none, remedy or replace the cable.
(4) Cooling fan does not operate.	Broken Cooling fan coil.	Check for continuity across the coil. If none, replace Cooling fan.
	Poor contact in the Cooling fan connector terminals.	Reinsert the connector. Also check for continuity within the connector cable. If none, remedy or replace the cable.
(5) The feed clutch does not operate.	Broken feed clutch coil.	Check for continuity across the coil. If none, replace the feed clutch.
	Poor contact in the feed clutch connector terminals.	Reinsert the connector. Also check for continuity within the connector cable. If none, remedy or replace the cable.
	Defective engine PWB.	Check if YC4-1 on the engine PWB goes low when the feed clutch is turned on. If not, replace the engine PWB.

Problem	Causes	Check procedures/corrective measures
(6) The MP feed clutch does not operate.	Broken MP feed clutch coil.	Check for continuity across the coil. If none, replace the MP feed clutch.
	Poor contact in the MP feed clutch connector terminals.	Reinsert the connector. Also check for continuity within the connector cable. If none, remedy or replace the cable.
	Defective engine PWB.	Check if YC5-2 on the engine PWB goes low when the MP feed clutch is turned on. If not, replace the engine PWB.
(7) The registration clutch does not operate.	Broken registration clutch coil.	Check for continuity across the coil. If none, replace the registration clutch.
	Poor contact in the registration clutch connector terminals.	Reinsert the connector. Also check for continuity within the connector cable. If none, remedy or replace the cable.
	Defective engine PWB.	Check if YC6-2 on the engine PWB goes low when the registration clutch is turned on. If not, replace the engine PWB.
(8) The eraser lamp does not turn on.	Poor contact in the eraser lamp connector terminals.	Reinsert the connector. Also check for continuity within the connector cable. If none, remedy or replace the cable.
	Defective eraser lamp.	Check for continuity. If none, replace the eraser lamp.
	Defective engine PWB.	If the eraser lamp turns on when YC14-2 on the engine PWB is held low, replace the engine PWB.
(9) The exposure lamp does not turn on.	Poor contact in the exposure lamp connector terminals.	Reinsert the connector. Also check for continuity within the connector cable. If none, remedy or replace the cable.
	Defective scanner PWB.	Check if the exposure lamp turns on with YC7-1 and YC7-2 on the scanner PWB goes low. If not, replace the scanner PWB.
	Defective engine PWB.	Check if the exposure lamp turns on with YC11-10 on the engine PWB goes low. If not, replace the engine PWB.
(10) The exposure lamp does not turn off.	Defective scanner PWB.	Check if the exposure lamp turns on with YC7-1 and YC7-2 on the scanner PWB goes low. If not, replace the scanner PWB.
	Defective engine PWB.	Check if the exposure lamp turns on with YC11-10 on the engine PWB goes low. If not, replace the engine PWB.
(11) The heater lamp does not turn on.	Broken wire in heater lamp.	Check for continuity across heater lamp. If none, replace the heater lamp.
	Thermal cutout triggered.	Check for continuity across thermal cutout. If none, remove the cause and replace the thermal cutout.
(12) The heater lamp does not turn off.	Broken heater lamp wire.	Measure the resistance. If it is ∞Ω, replace the thermistor.
	Dirty sensor part of the thermistor.	Check visually and clean the thermistor sensor parts.

Problem	Causes	Check procedures/corrective measures
(13) Main charging is not performed.	Broken main charger wire.	See page 1-5-16.
	Leaking main charger housing.	
	Poor contact in the high voltage PWB connector terminals.	
	Defective engine PWB.	
	Defective high voltage PWB.	
(14) Transfer charging is not performed.	Poor contact in the high voltage PWB connector terminals.	See page 1-5-16.
	Defective engine PWB.	
	Defective high voltage PWB.	
(15) A paper jam in the paper feed or exit section is indicated when the power switch is turned on.	A piece of paper torn from paper is caught around registration sensor or exit sensor.	Check and remove if any.
	Defective registration sensor.	Check if YC8-7 on the engine PWB remains low when the registration sensor is turned on and off. If it does, replace the registration sensor.
	Defective exit sensor.	Check if YC7-7 on the engine PWB remains low when the exit sensor is turned on and off. If it does, replace the exit sensor.
(16) The message requesting cover to be closed is displayed when the front cover is closed.	Poor contact in the connector terminals of interlock switch.	Reinsert the connector. Also check for continuity within the connector cable. If none, remedy or replace the cable.
	Defective interlock switch.	Check for continuity across switch. If there is no continuity when the switch is on, replace it.
(17) Others.	Wiring is broken, shorted or makes poor contact.	Check for continuity. If none, repair.
	Noise.	Locate the source of noise and remove.

1-5-5 Mechanical problems

Problem	Causes/check procedures	Corrective measures
(1) No primary paper feed.	Check if the surfaces of the feed roller and MP feed roller are dirty with paper powder.	Clean with isopropyl alcohol.
	Check if the feed roller and MP feed roller are deformed.	Check visually and replace any deformed rollers (see pages 1-6-5, 6).
	Electrical problem with the feed clutch and MP feed clutch.	See pages 1-5-22, 23.
(2) No secondary paper feed.	Check if the surfaces of the upper and lower registration rollers are dirty with paper powder.	Clean with isopropyl alcohol.
	Electrical problem with the registration clutch.	See page 1-5-23.
(3) Skewed paper feed.	Deformed width guide in a cassette.	Repair or replace if necessary .
(4) The scanner does not travel.	The scanner motor malfunctions.	See page 1-5-22.
(5) Multiple sheets of paper are fed at one time.	Deformed cassette claw.	Check the cassette claw visually and correct or replace if necessary.
(6) Paper jams.	Check if the paper is curled.	Change the paper.
	Deformed guides along the paper conveying path.	Check visually and replace any deformed guides.
	Check if the contact between the upper and lower registration rollers is correct.	Check visually and remedy if necessary.
	Check if the press roller is extremely dirty or deformed.	Clean or replace the press roller.
	Check if the contact between the heat roller and its separation claws is correct.	Repair if any springs are off the separation claws.
(7) Abnormal noise is heard.	Check if the rollers and gears operate smoothly.	Grease the bearings and gears.
	Check if the following electromagnetic clutches are installed correctly: feed clutch, MP feed clutch and registration clutch.	Correct.

1-6-1 Precautions for assembly and disassembly

(1) Precautions

- Be sure to turn the power switch off and disconnect the power plug before starting disassembly.
- When handling PWBs, do not touch connectors with bare hands or damage the board.
- Do not touch any PWB containing ICs with bare hands or any object prone to static charge.
- Use only the specified parts to replace the fuser unit thermostat. Never substitute electric wires, as the machine may be seriously damaged.
- Do not perform aging without the waste toner tank installed during maintenance service.
- Prepare the following as test originals:
  1. NTC (new test chart)
  2. NPTC (newspaper test chart)

1-6-2 Removing the process unit

1. Open the front top cover.
2. Open the front cover.
3. Lift the process unit together with the toner container out of the machine.

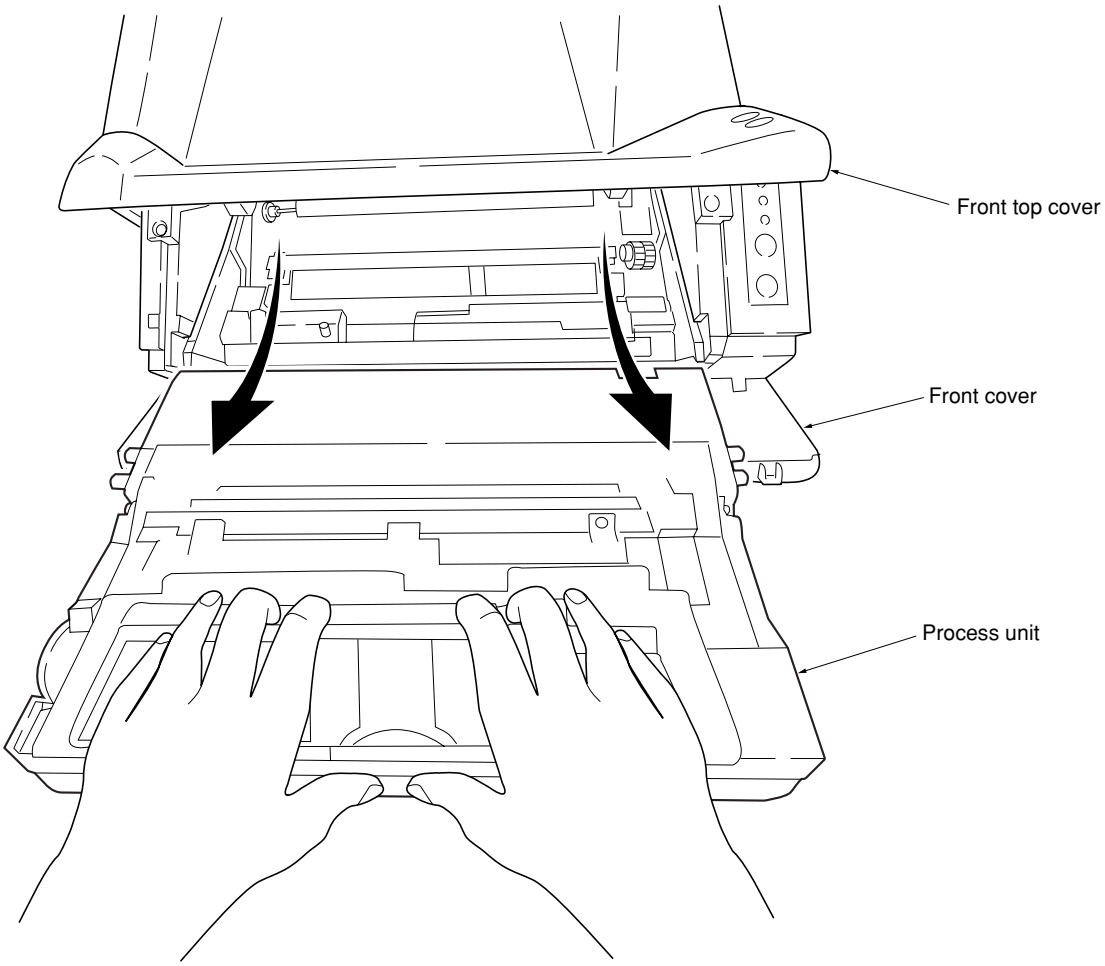

Figure 1-6-1 Removing the process unit

CAUTIONS

- After removing the process unit, seal it in the protective bag and place it on flat surface. Do not place the process unit in a dusty area.
- Do not give impact to the process unit.
- Do not place floppy disks near the process unit.
- If the process unit is replaced for some reason, the toner installation mode must be run.
  1. Run maintenance mode U157 to clear the developing drive time.
  2. Run maintenance mode U130 to turn the setting ON.
  3. Turn the power switch off and then on again.

  The toner installation mode starts to add toner to the developing section of the process unit (approximately 15 minutes).

  * Run the toner installation mode only when you have replaced the process unit with a new one. (Do not run it when toner remains in the process unit.)

1-6-3 Removing the principal outer covers

(1) Removing the front top cover/face-down output tray

1. Remove the screw and then remove the memory cover.
2. Remove the screw and then remove the rear cover.

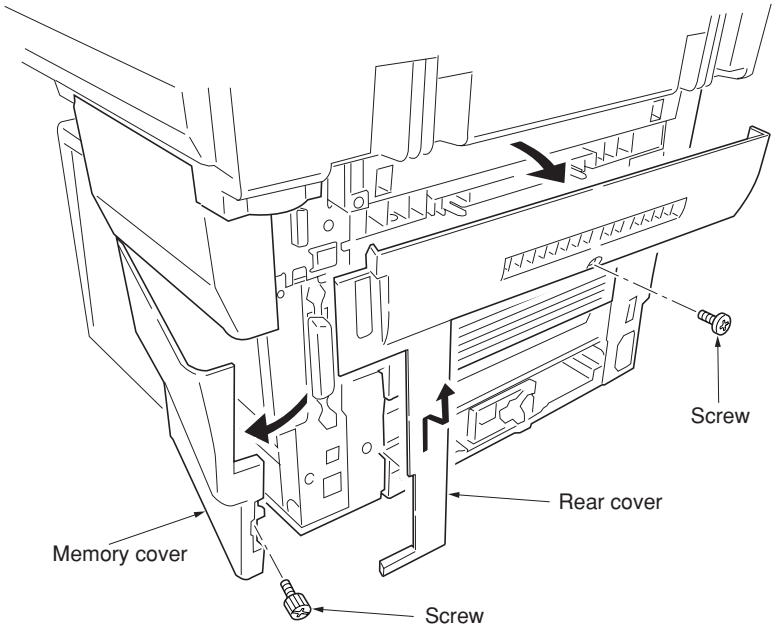

Figure 1-6-2 Removing the memory cover and rear cover

3. While unlatching the two latches and then remove the front top cover/face-down output tray.

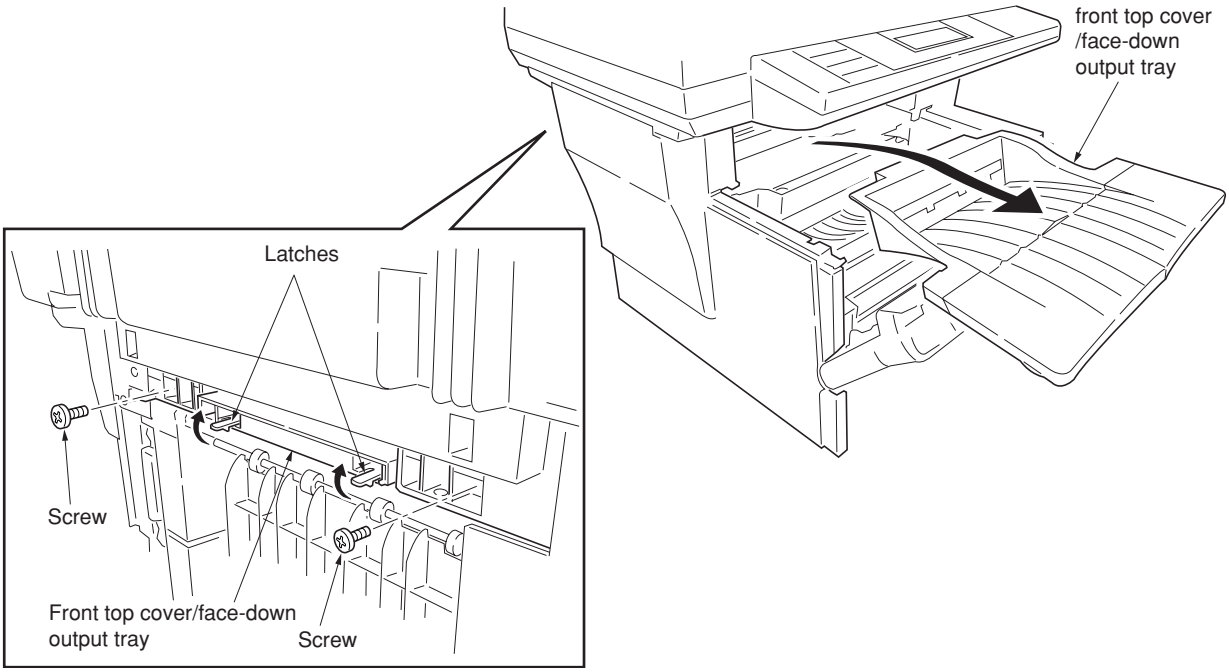

Figure 1-6-3 Removing the front top cover/face-down output tray

(2) Removing the right cover

1. Remove the front top cover/face-down output tray (see page1-6-3).
2. Remove the memory cover (see page 1-6-3).
3. Unlatch the snaps and hook, remove the right cover.

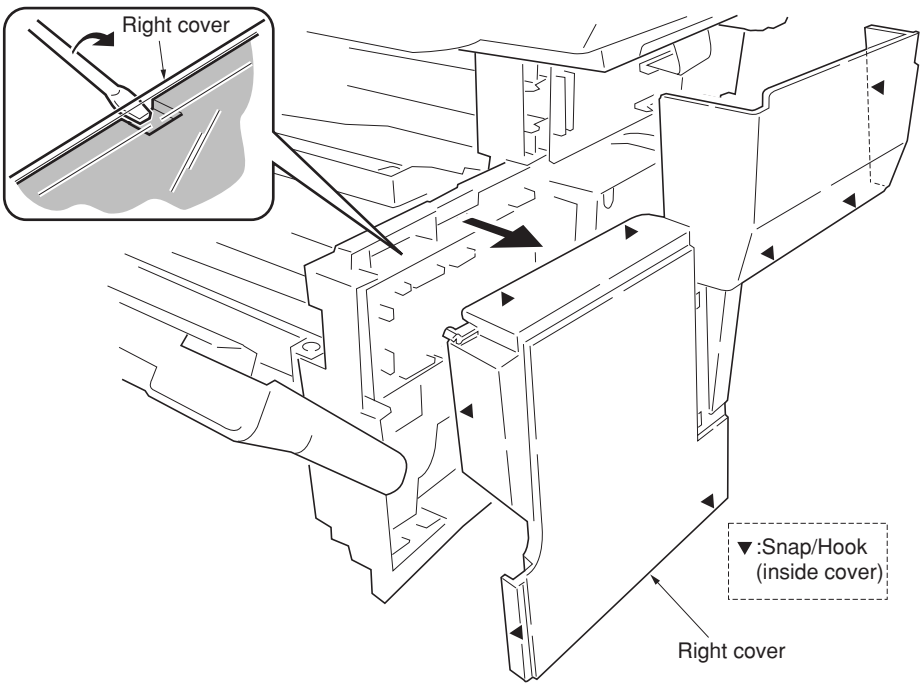

Figure 1-6-4 Removing the right cover

(3) Removing the left cover

1. Remove the front top cover/face-down output tray (see page1-6-3).
2. Unlatch the snaps and hooks, remove the left cover.

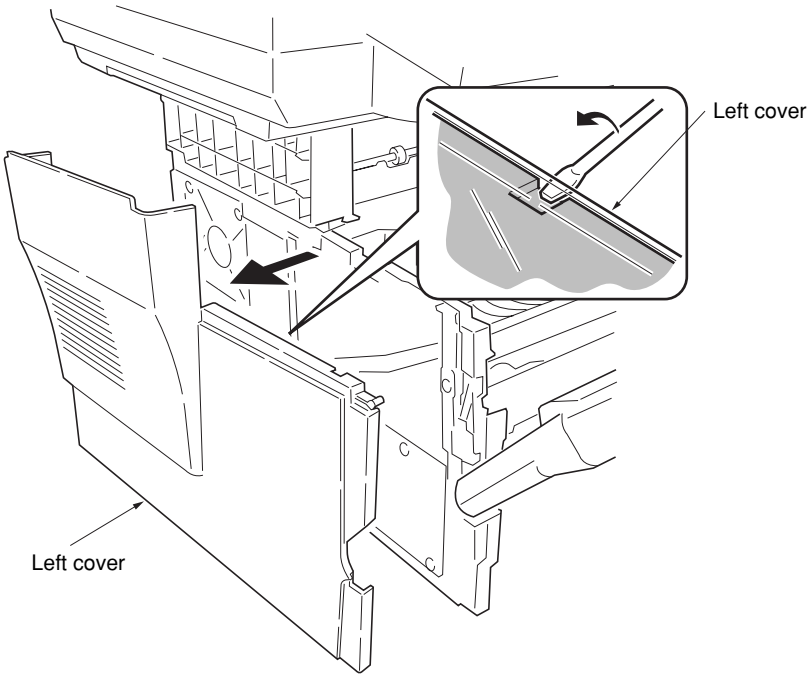

Figure 1-6-5 Removing the left cover

1-6-4 Removing the feed roller

CAUTION
When refit the feed roller, fit the D-cut shaft into the D-shape hole of the feed roller.

1. Remove the cassette and the process unit (see page 1-6-2).
2. Stand the machine the front side up.
3. Move the feed roller in the direction Ⓐ, and remove the feed roller.

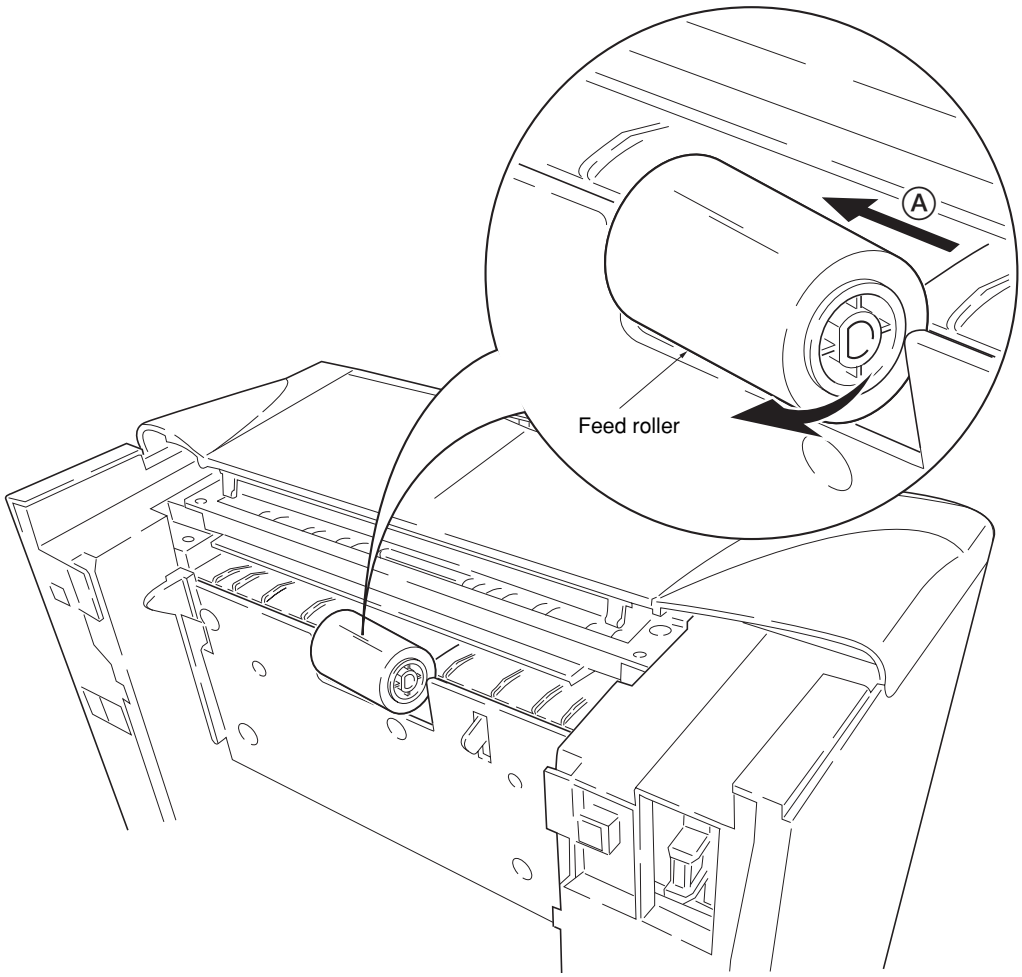

Figure 1-6-6 Removing the feed roller

1-6-5 Removing the MP feed roller

1. Remove the engine PWB (see page 1-6-9).
2. Remove the screw.
3. Remove the grounding plate.
4. Remove the stop ring .
5. Remove the MP feed clutch.

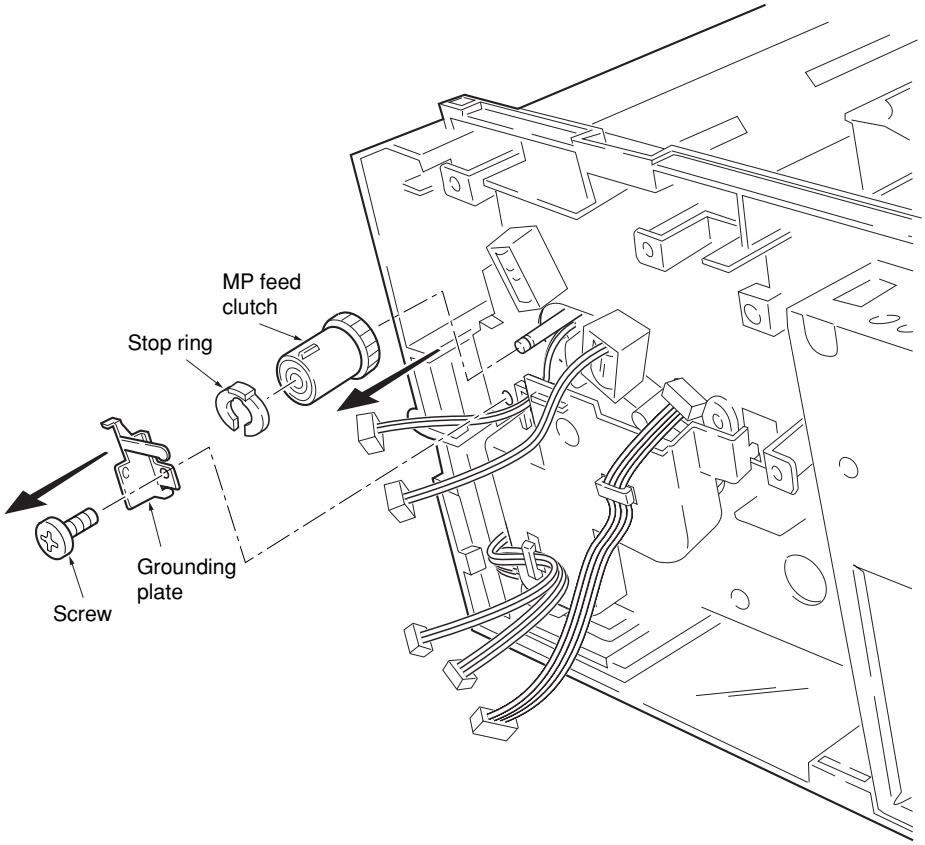

Figure 1-6-7 Removing the MP feed clutch

6. Remove the screw.
7. Remove the toner sensor and spring.
8. Remove two screws.
9. While pressing the latch by using the driver and then remove the MP feed unit.

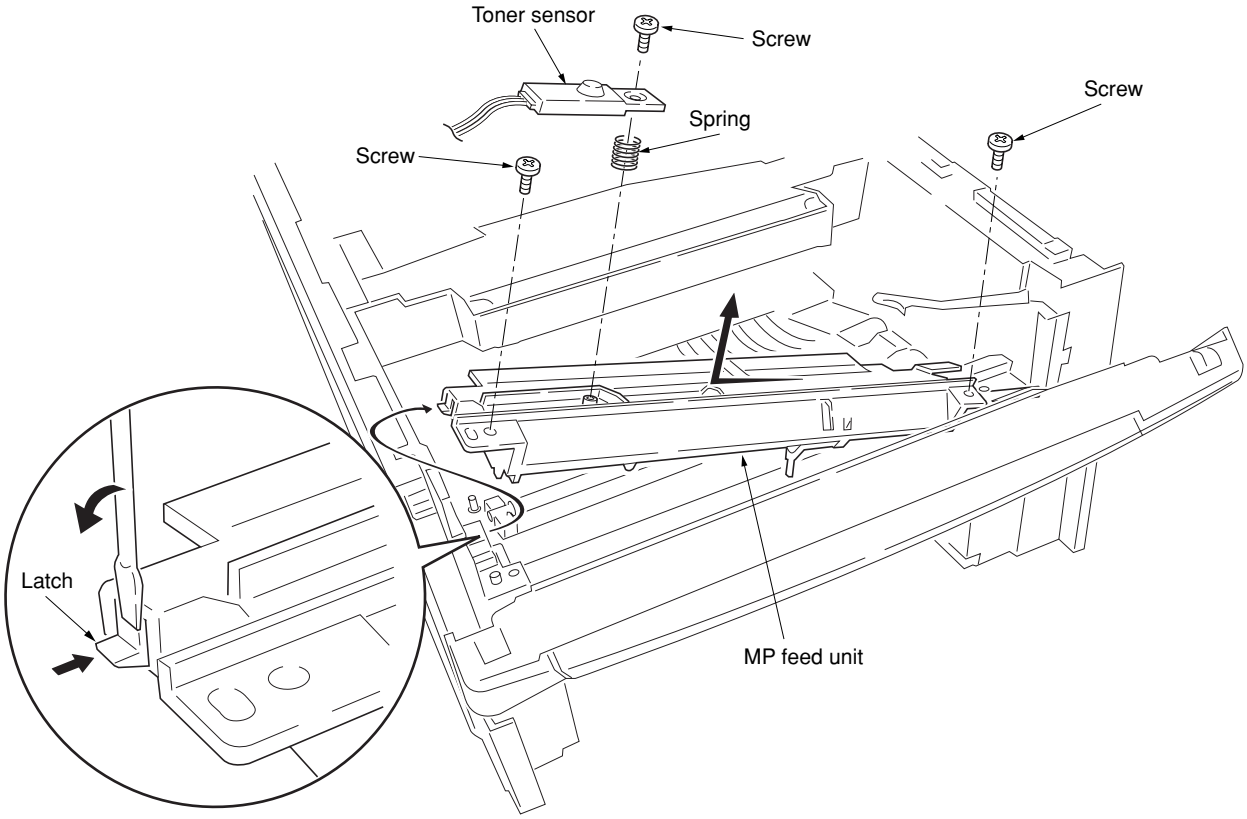

Figure 1-6-8 Removing the MP feed unit

10. Remove the stop ring and then remove the MP feed roller.

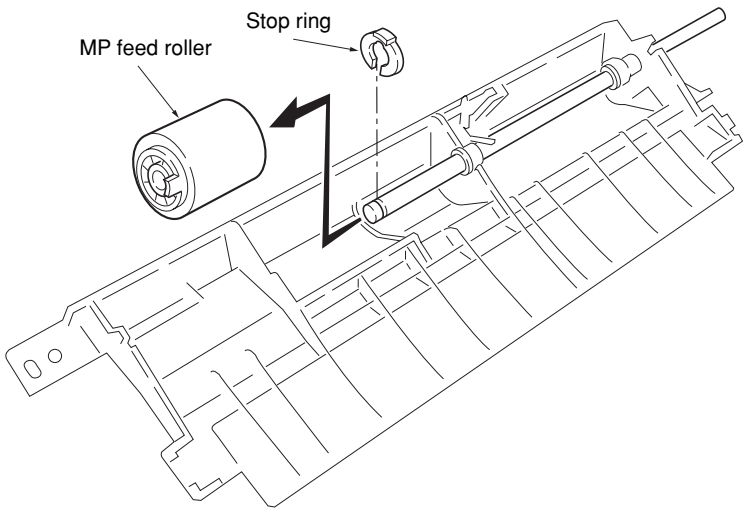

Figure 1-6-9 Removing the MP feed roller

1-6-6 Removing the transfer roller

CAUTION
Do not touch the transfer roller (sponge) surface. Oil and dust (particles of paper, etc.) on the transfer roller can significantly deteriorate the print quality (white spots, etc.).

When refitting the bushes and springs, make sure to refit the black colored bush and spring on the left side. Also, observe the correct direction to which the bush is fit in reference to the paper passing direction.

1. Remove the process unit (see page 1-6-2).
2. Remove the transfer roller from the both bushes.

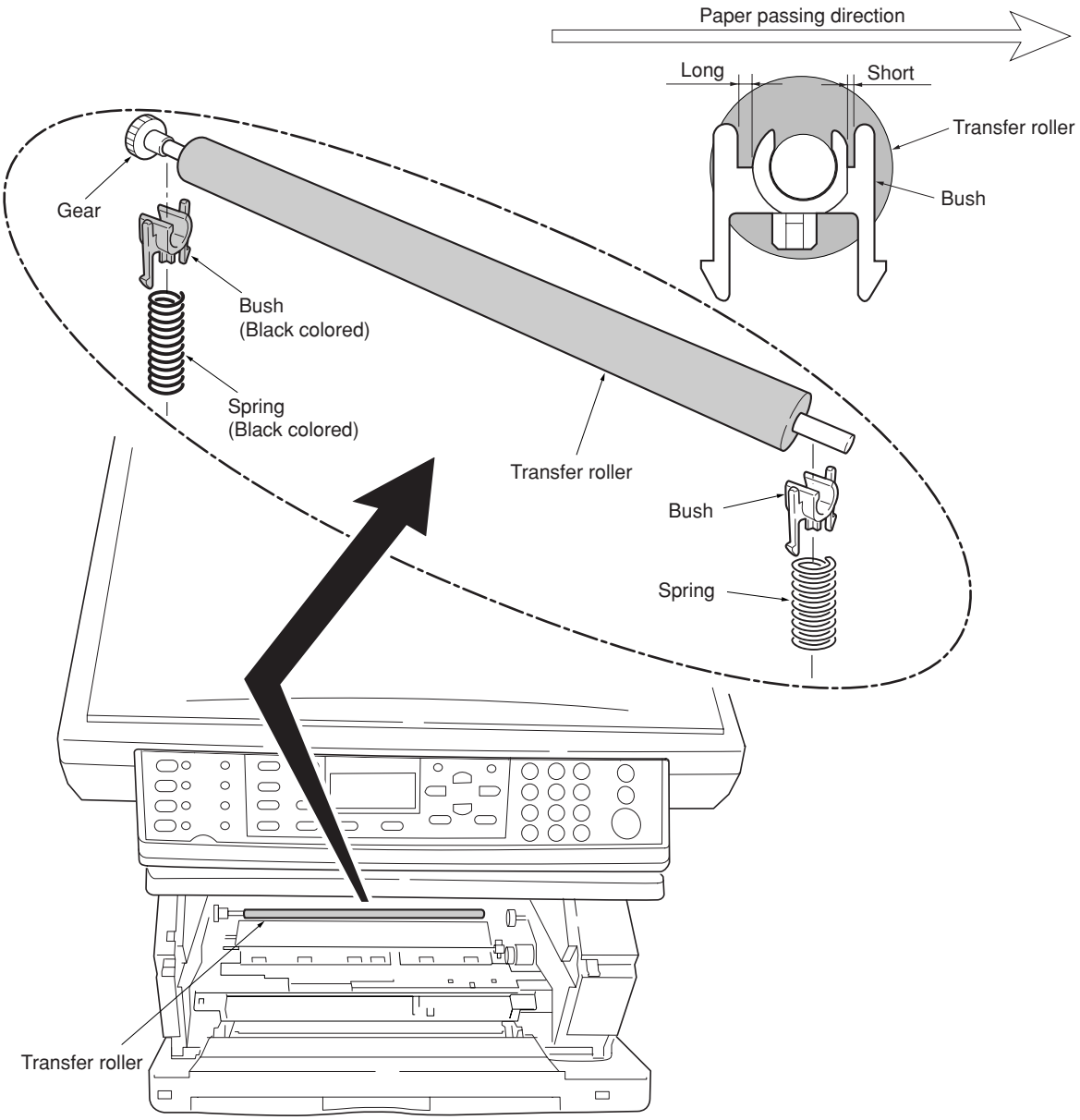

Figure 1-6-10 Removing the transfer roller

1-6-7 Removing the primary circuit PWBs

(1) Removing the engine PWB

1. Remove the right cover (see page 1-6-4).
2. Remove all (twelve) connectors from the engine PWB.
3. Remove three screws.
4. Remove the engine PWB.

* When replacing the PWB with a new PWB, remove the EEPROM from the old PWB and mount it to the new PWB.

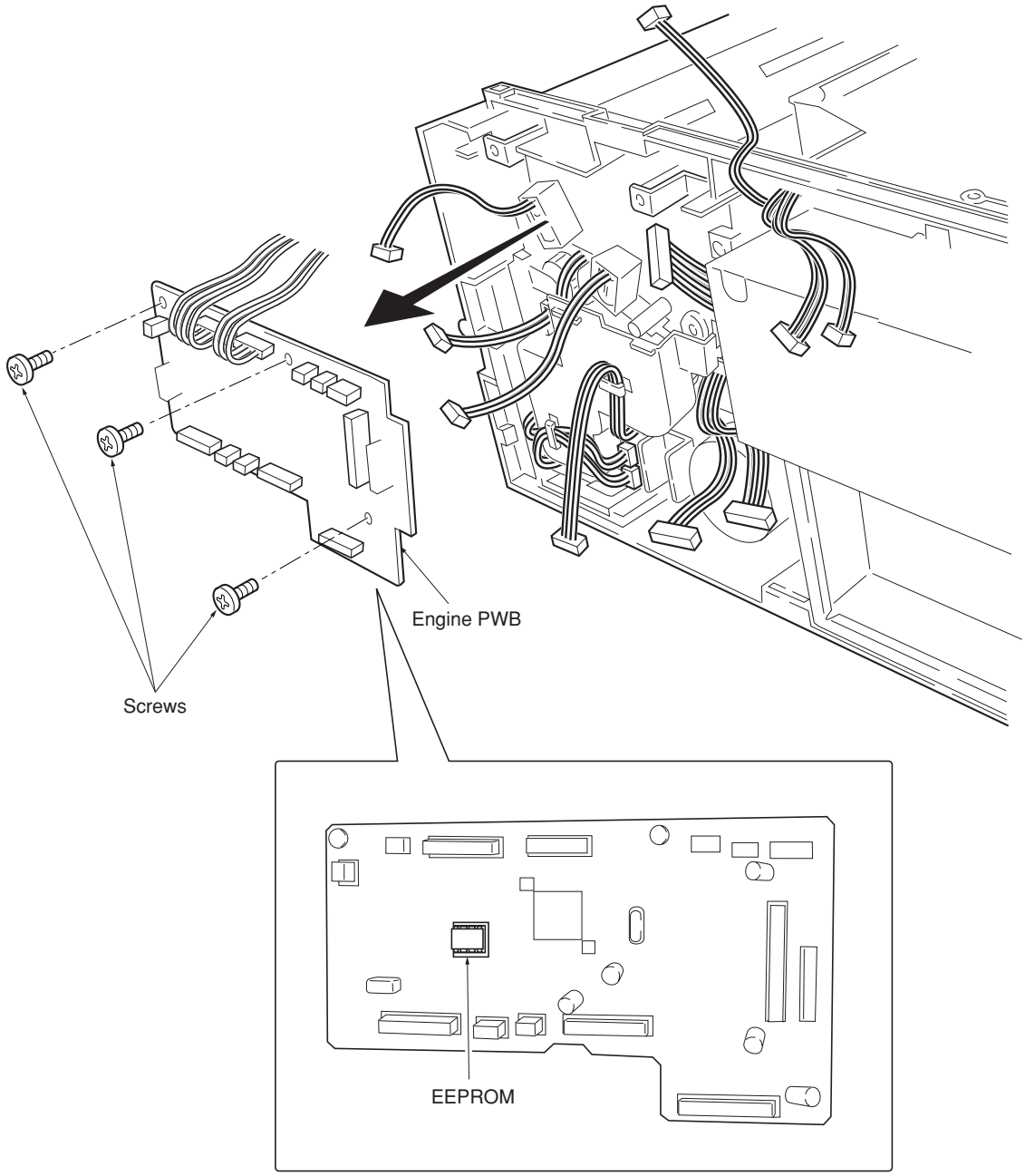

Figure 1-6-11 Removing the engine PWB

(2) Removing the main PWB

1. Remove the right cover (see page 1-6-4).
2. Remove the connector.
3. Remove the screw and then remove the speaker.

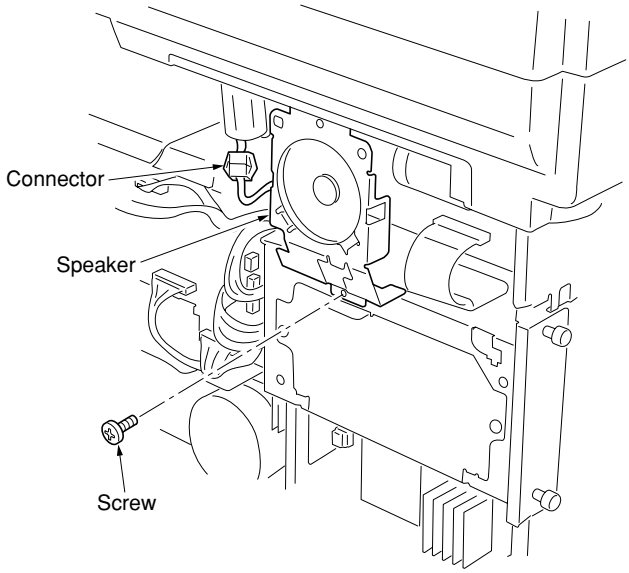

Figure 1-6-12 Removing the speaker

4. Remove three connectors.
5. Remove the flexible flat cable.
6. Remove seven screws and then remove the main controller shield (with main PWB).

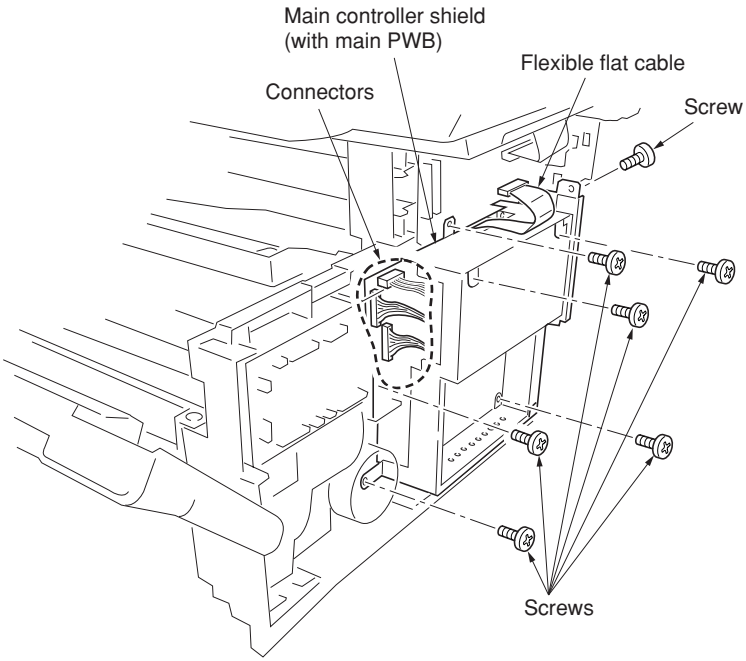

Figure 1-6-13 Removing the main controller shield (with main PWB)

7. Remove two screws at the back of the main PWB.
 * When replacing the PWB with a new PWB, remove the EEPROM from the old PWB and mount it to the new PWB.

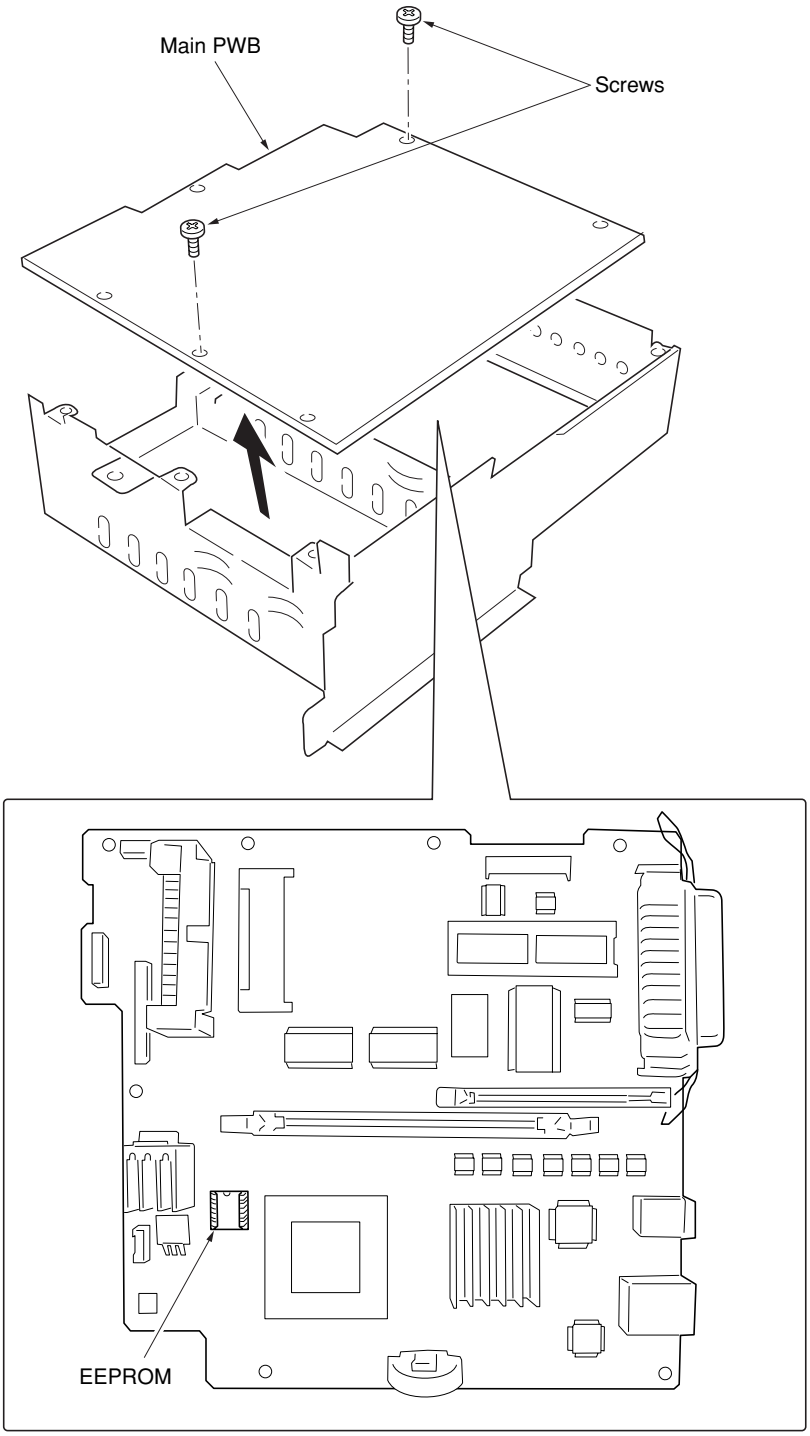

Figure 1-6-14 Removing the main PWB

(3) Removing the power supply PWB and high voltage PWB

1. Remove the process unit (see page 1-6-2).
2. Remove the left cover (see page 1-6-4).
3. Remove three connectors from the power supply PWB.
4. Remove eight screws.
5. Remove the power supply PWB and high voltage PWB. (Note: The high voltage PWB is directly connected to the bias PWB.)
6. Separate the high voltage PWB from the power supply PWB.

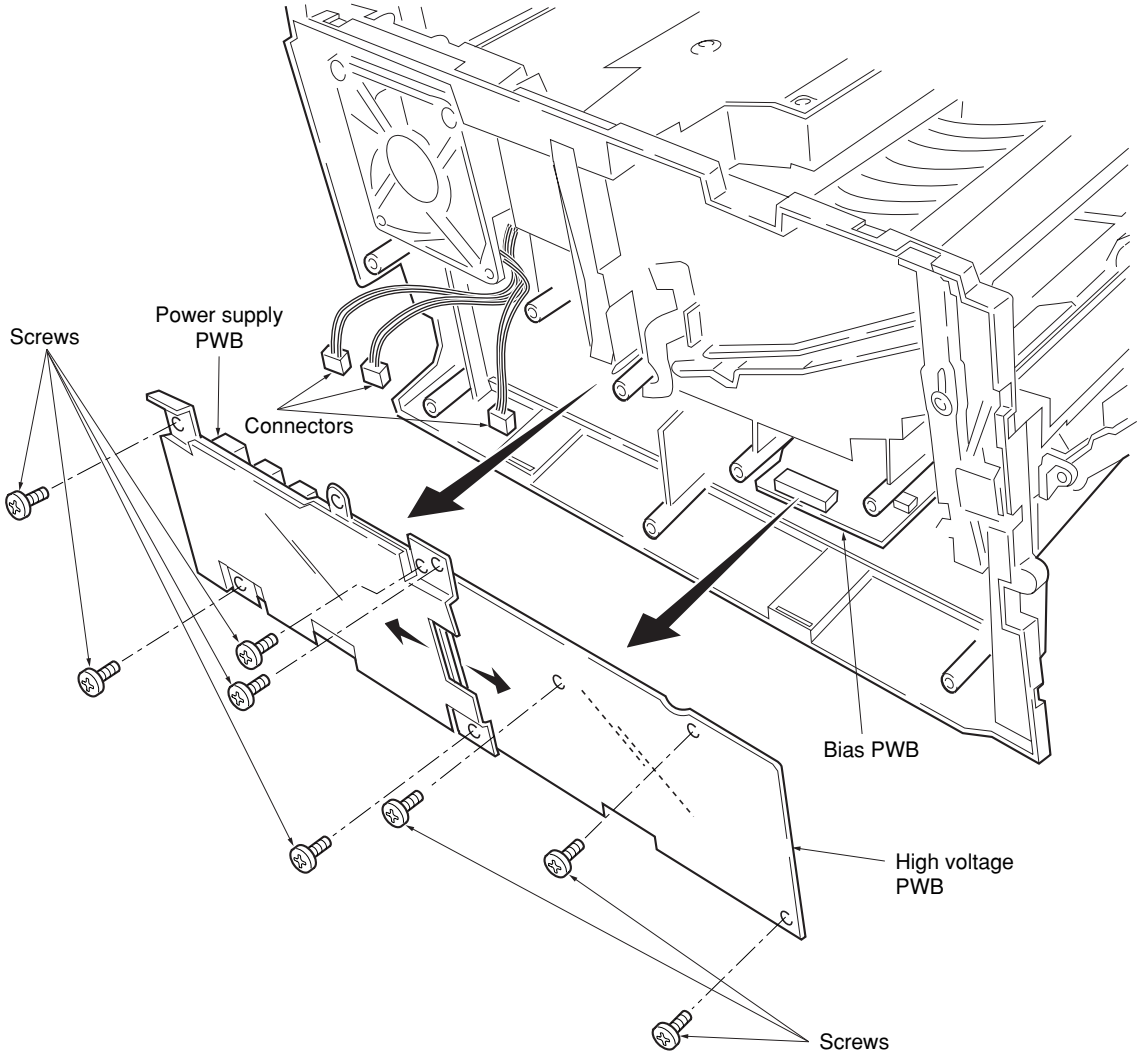

Figure 1-6-15 Removing the power supply PWB and high voltage PWB

(4) Removing the bias PWB

1. Remove the cassette and process unit (see page 1-6-2).
2. Remove the left cover (see page 1-6-4).
3. Remove the power supply PWB and high voltage PWB (see page 1-6-12).
4. Stand the machine with the front side up.
5. Remove the connector from the bias PWB.
6. Remove five screws.
7. Remove the bottom cover.
8. Remove two connectors from the bias PWB.
9. Remove the bias PWB.

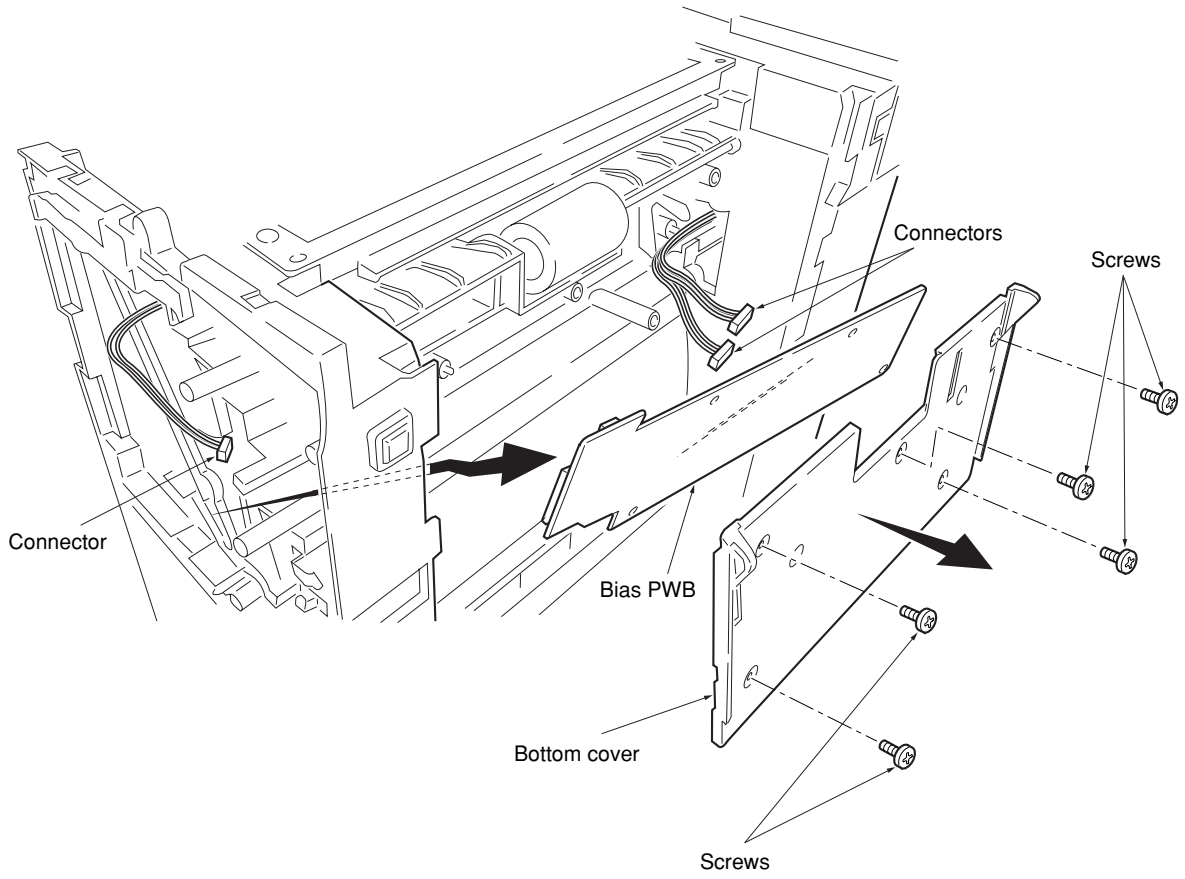

Figure 1-6-16 Removing the bias PWB

1-6-8 Removing the main motor and drive unit

1. Remove the cassette and process unit (see page 1-6-2).
2. Remove the right cover (see page 1-6-4).
3. Remove three connectors from the main motor.
4. Remove four screws.
5. Remove main motor.

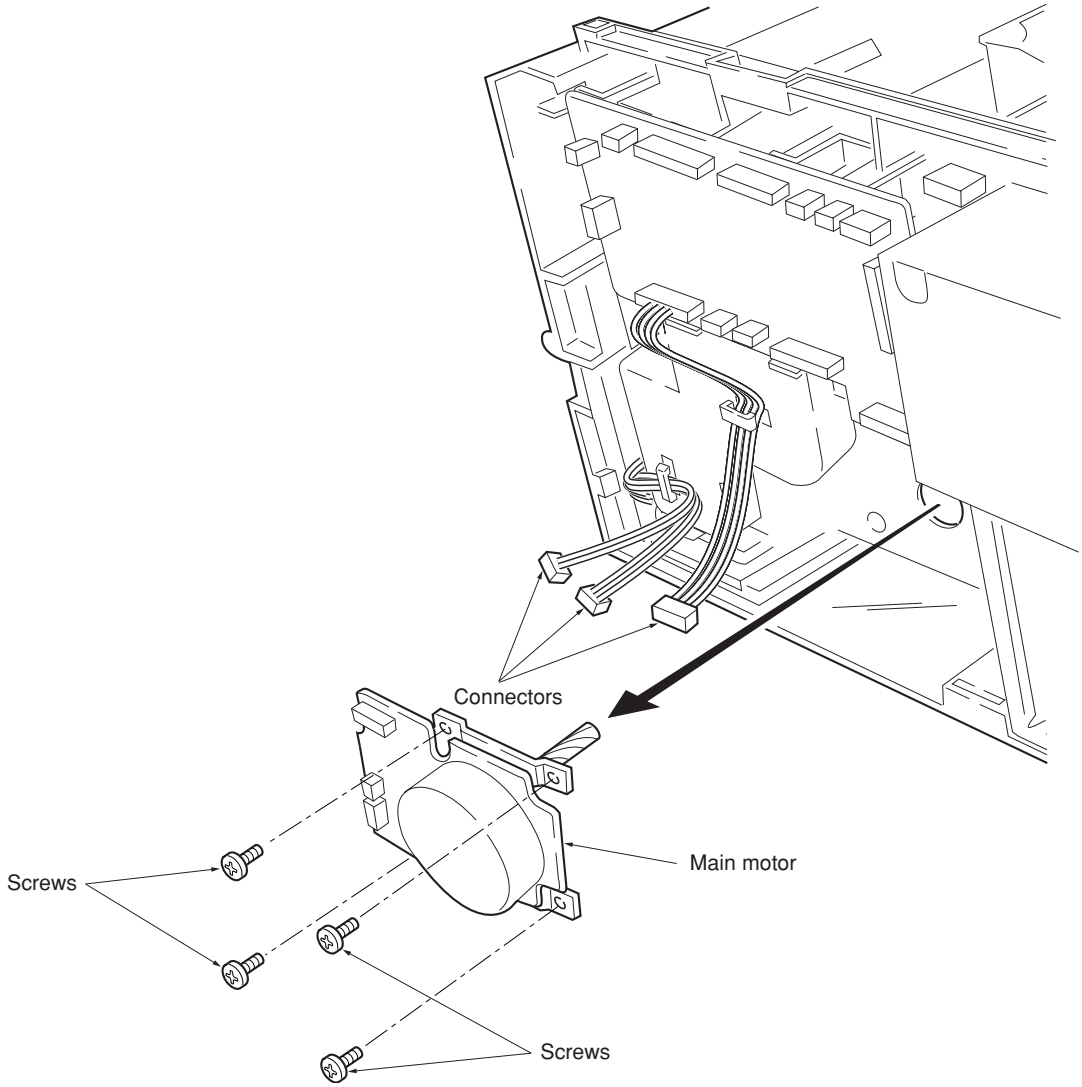

Figure 1-6-17 Removing the main motor

6. Remove the engine PWB (see page 1-6-9).
7. Remove wires from wire saddles on the cord cover.
8. Remove the screw.
9. Remove the cord cover.

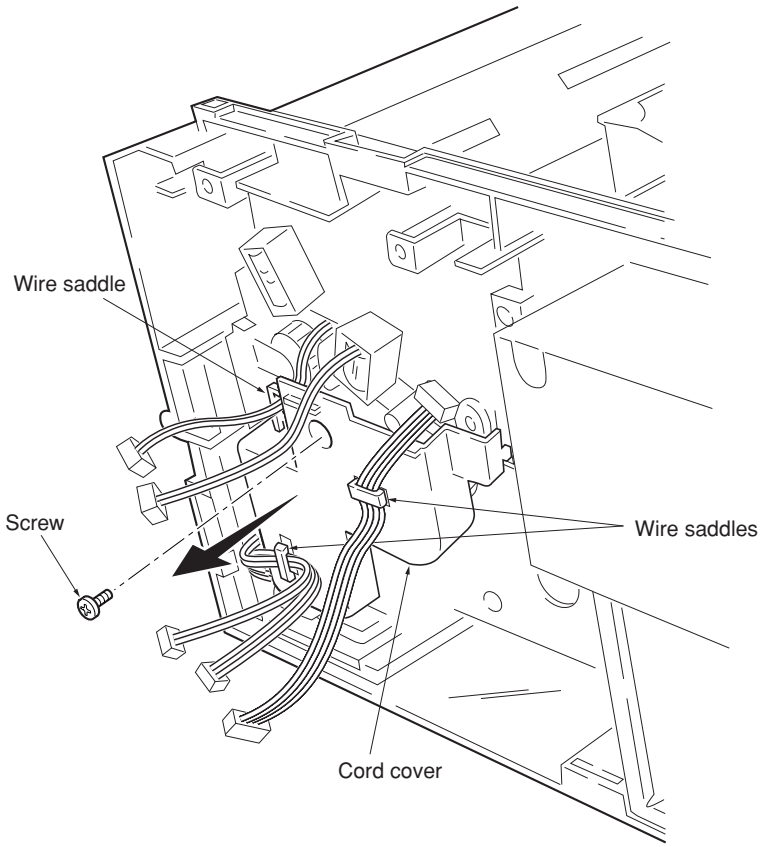

Figure 1-6-18 Removing the cord cover

10. Remove the main PWB (see page 1-6-10).
11. Remove the screw and then remove the grounding plate.
12. Remove the screw and then remove the feed clutch.
13. Remove three stop rings.
14. Remove MP feed clutch (gear), feed clutch (gear), and registration clutch (gear).

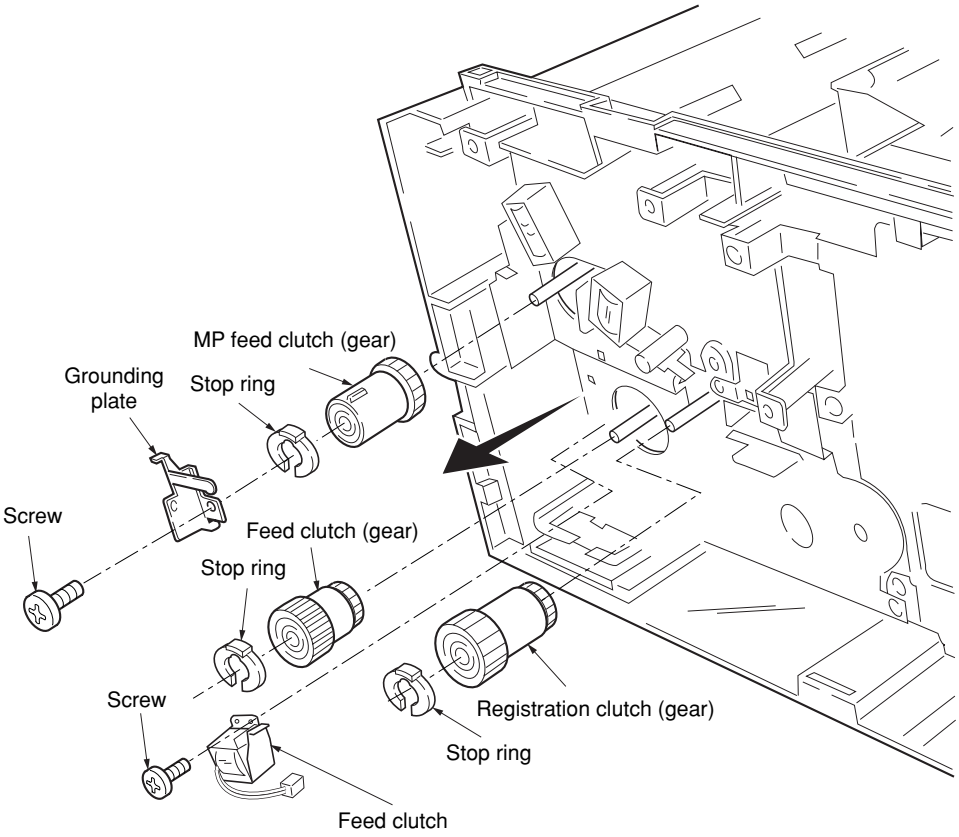

Figure 1-6-19 Removing the clutches

15. Remove four screws.
16. Remove the drive unit.

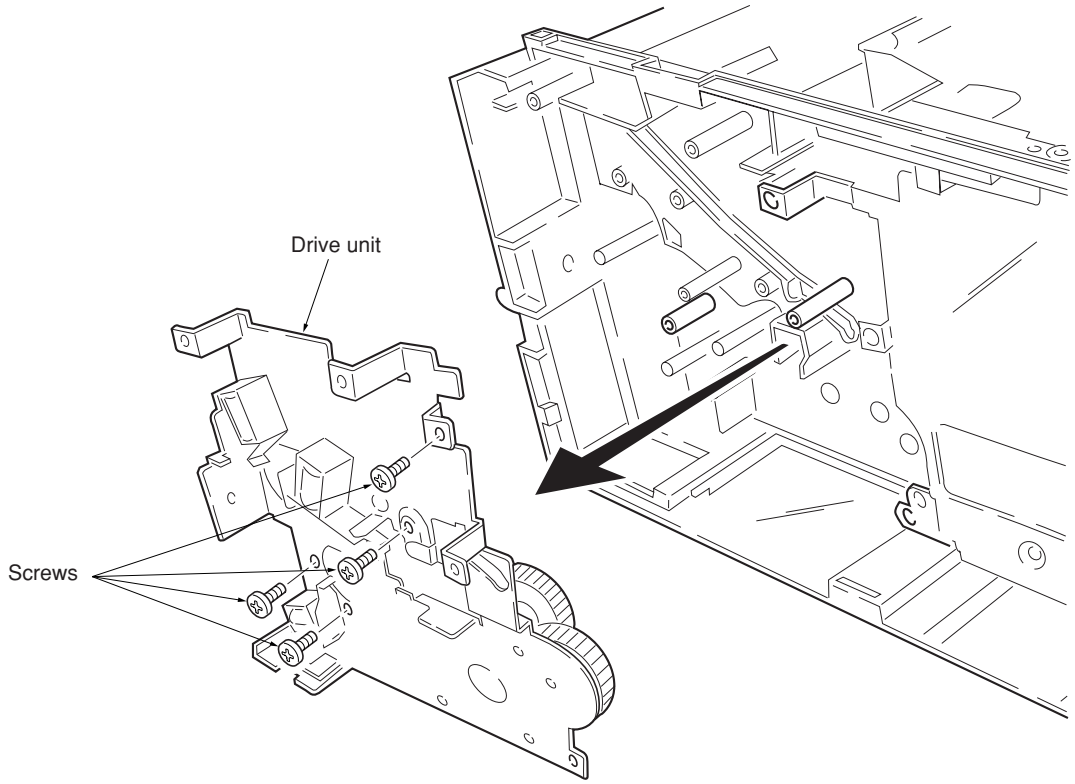

Figure 1-6-20 Removing the drive unit

1-6-9 Removing and splitting the fuser unit

WARNING

• The fuser unit is hot after the machine was running. Wait until it cools down.

CAUTION

• When refitting the fuser unit, make sure the fuser unit gear and the machine's drive gear are properly meshed with each other. For this, rotate the main motor several turns before fusing screws.

1. Remove the rear cover (see page 1-6-3).
2. Remove the right and left cover (see page 1-6-4).
3. Remove two connectors.
4. Remove two screws.
5. Remove the fuser unit.

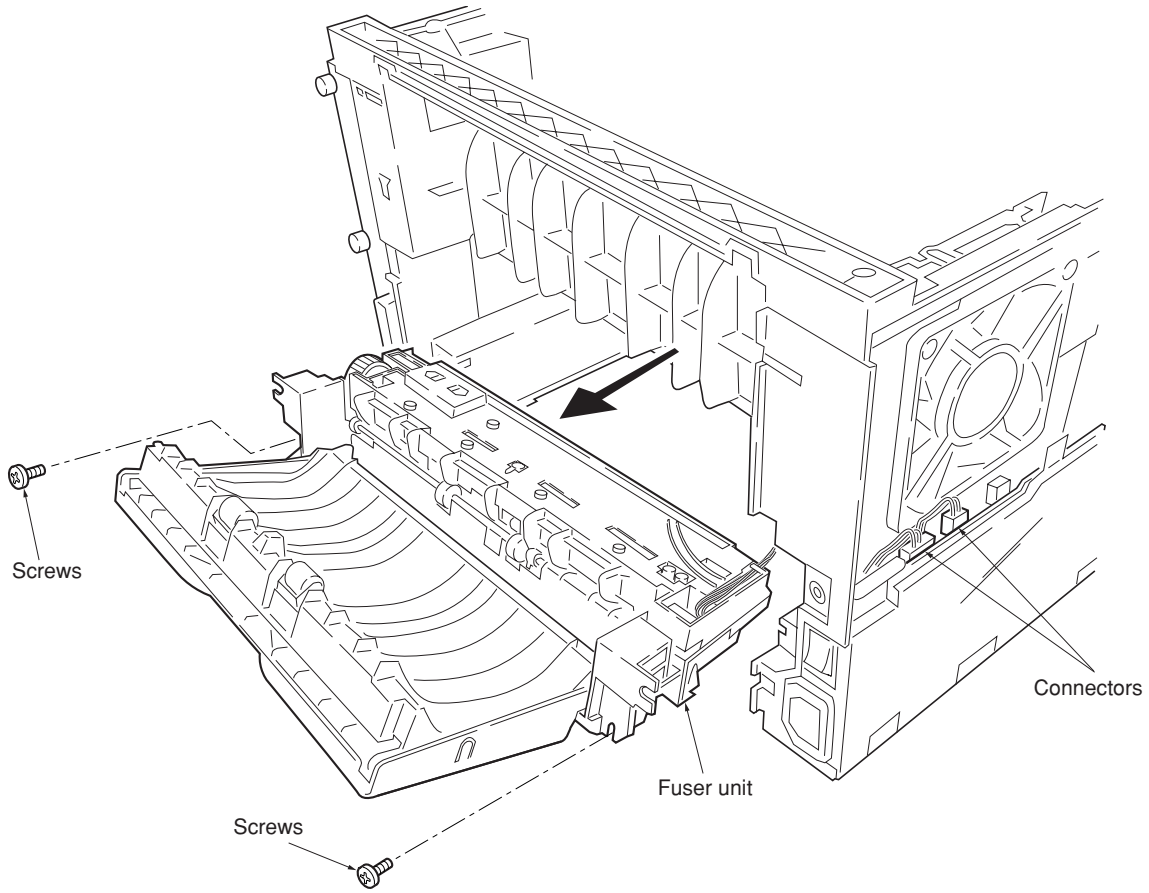

Figure 1-6-21 Removing the fuser unit

6. Remove two screws.
7. Open and split the fuser unit.

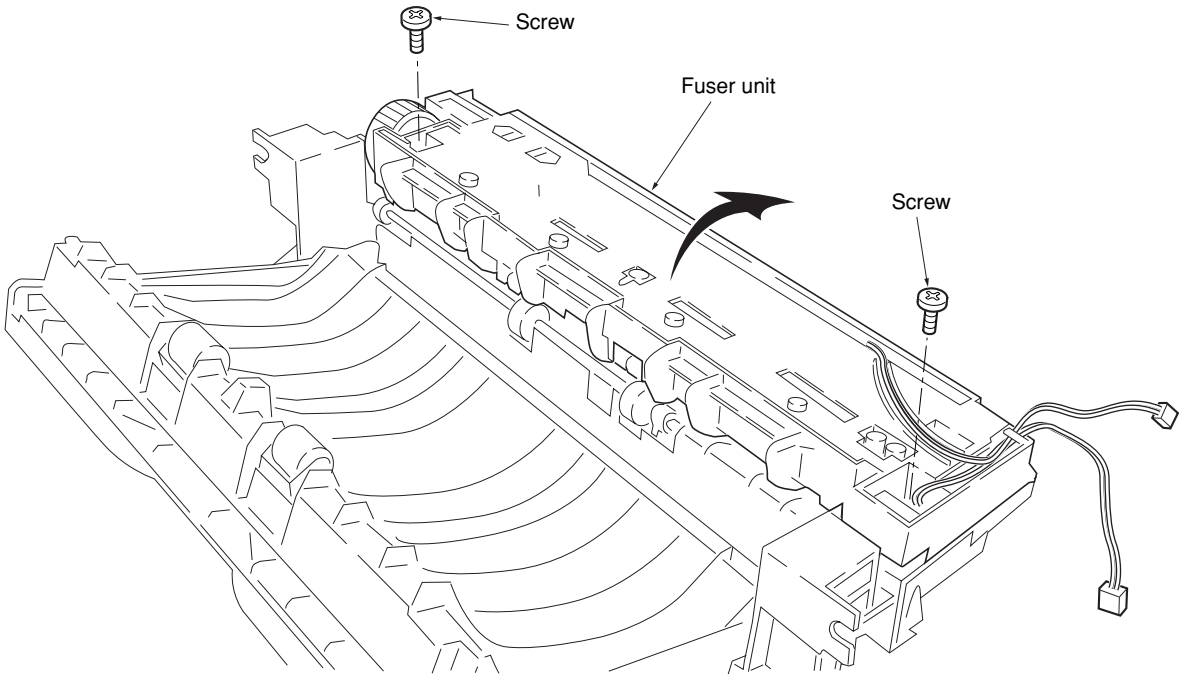

Figure 1-6-22 Splitting the fuser unit

(1) Removing the separation claws

WARNING
The separation claws are extremely hot immediately after the copier was running. Allow substantial period of time until it cools down.

1. Remove and split the fuser unit (see page 1-6-18).
2. Loosen the stopper screws.
3. Hold the separation claw upright, and remove the separation claw and separation claw springs.

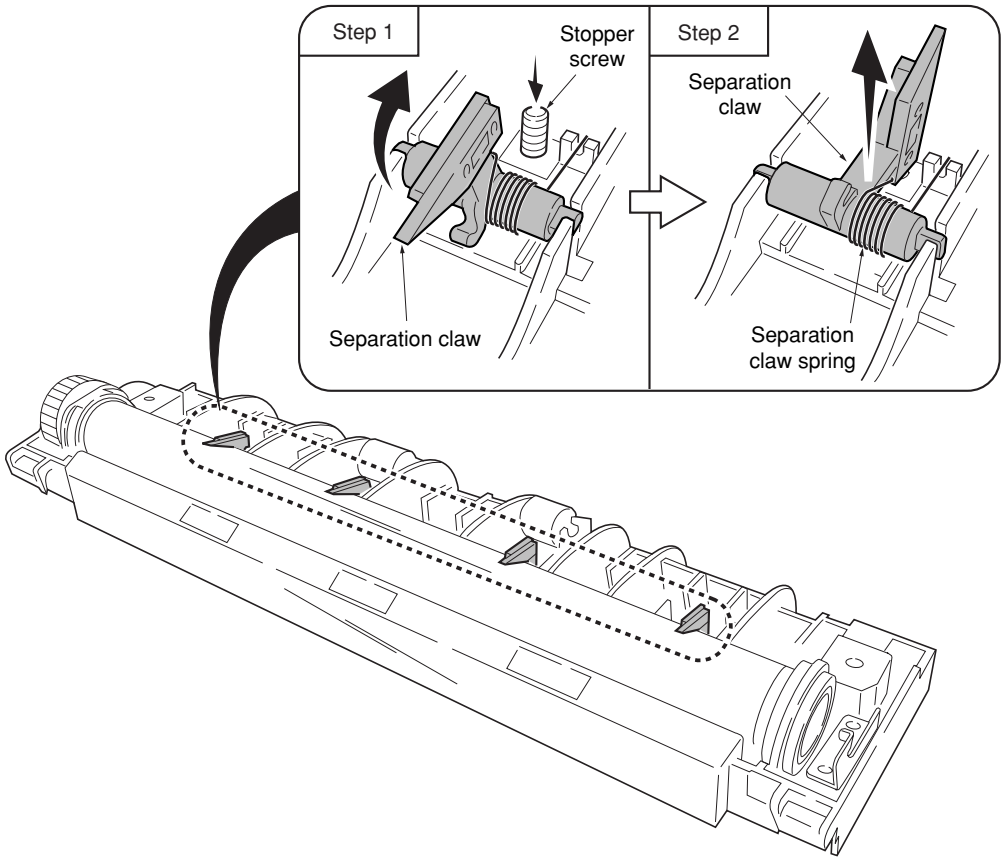

Figure 1-6-23 Removing the separation claws

(2) Removing the heater lamp

WARNING
- The heater lamp is extremely hot immediately after the machine was running.
- Allow substantial period of time until it cools down. Also, the heater lamp is fragile: Handle it with great care.

CAUTION
- The heater lamps are fragile. Use extreme care when handling not to drop or break.
- Do not directly touch on the heater lamp. Finger prints on the heater lamp's outer surface can prevent proper fusing of toner on paper.
- When refitting the heater lamp, direct the short distance side from the projection in the middle of the lamp facing the machine's left side.

1. Remove and split the fuser unit (see page 1-6-18).
2. Remove all (four) separation claws (see page 1-6-20).
3. Remove the screw, release the tension of the lamp A holder.
4. Remove the heater lamp form the lamp B holder.
5. Remove the heater lamp from the heat roller.

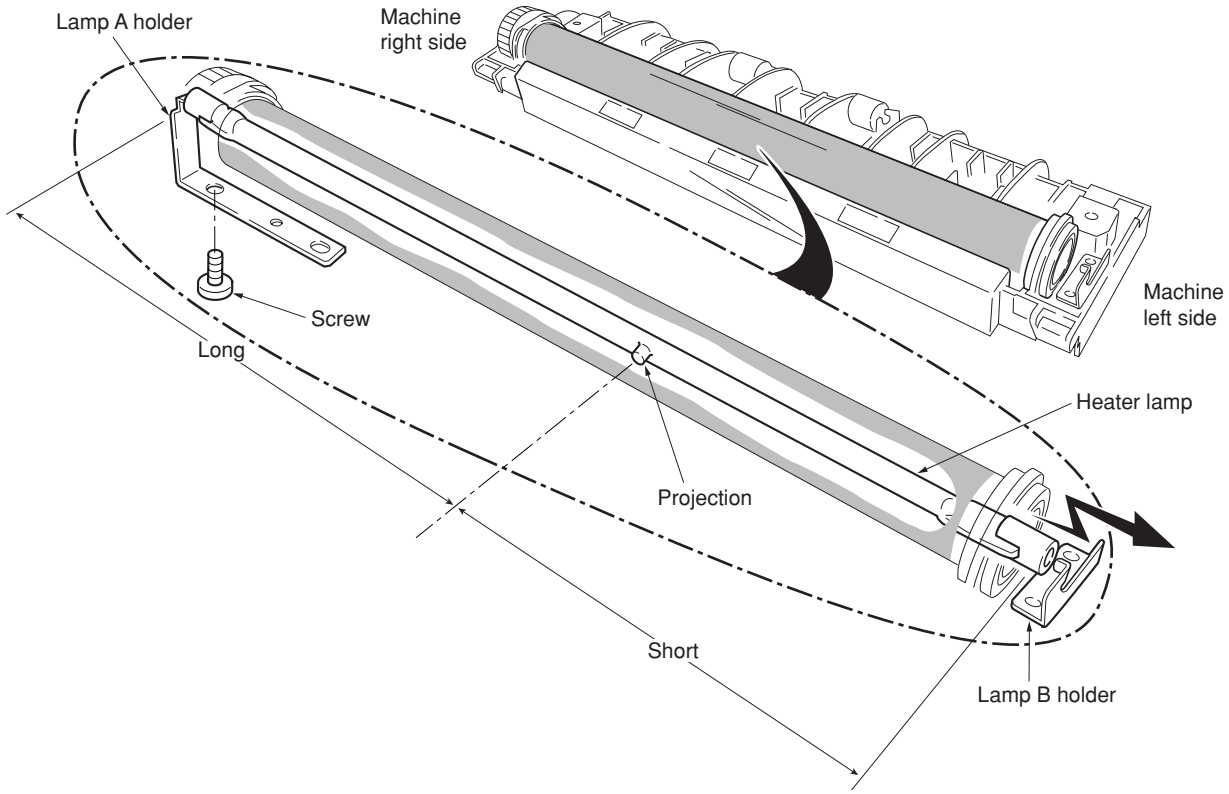

Figure 1-6-24 Removing the heater lamp

(3) Removing the heat roller

WARNING

- The heat roller is extremely hot immediately after the machine was running. Allow substantial period of time until it cools down.

1. Remove and split the fuser unit (see page 1-6-18).
2. Remove the heater lamp (see page 1-6-22).
3. Press the lamp A holder away from the heat roller. Pull up both heat R bush and heat L bush at the same time.

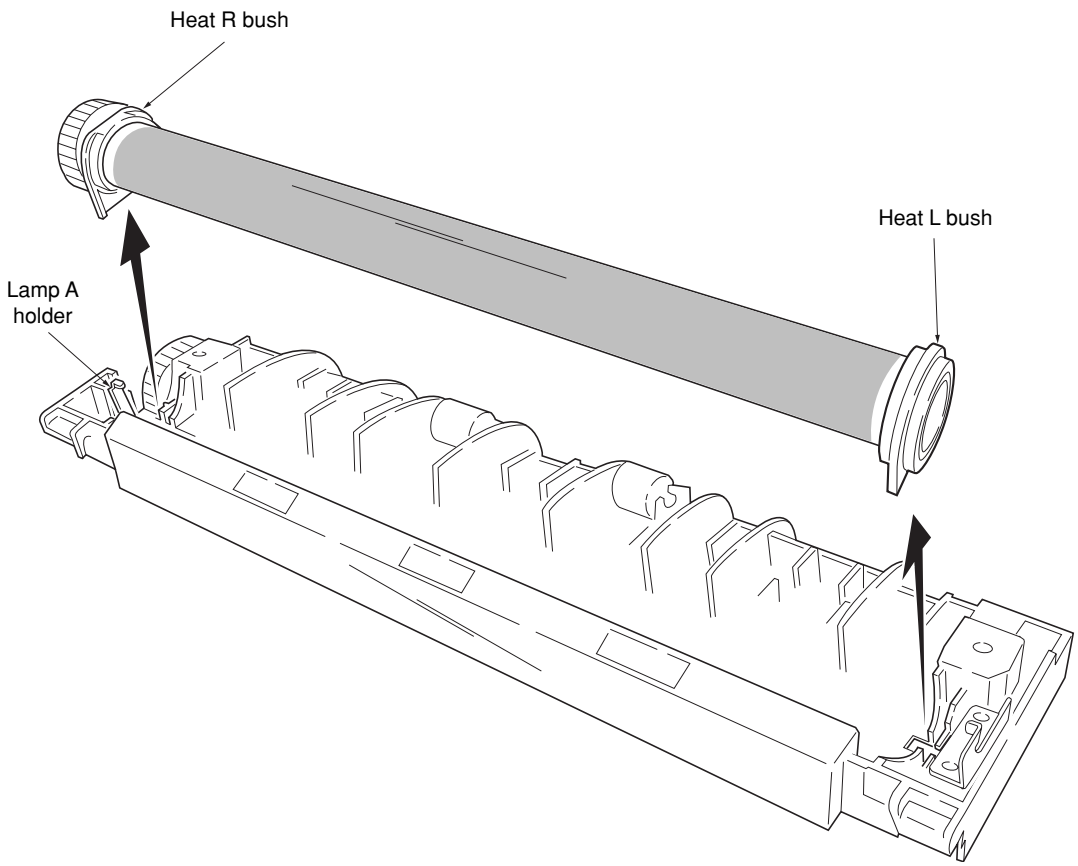

Figure 1-6-25 Removing the heat R bush and heat L bush

4. Remove the heat gear Z33, heat R bush, and heat L bush from the heat roller.

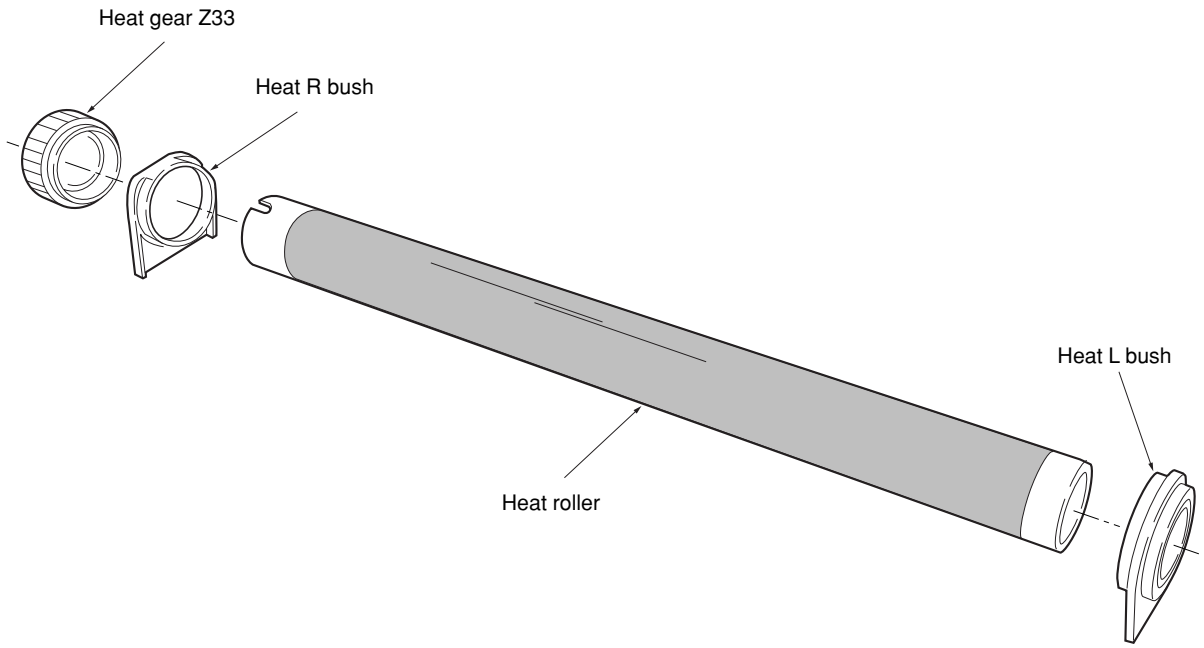

Figure 1-6-26 Removing the heat roller

(4) Removing the thermistor

1. Remove and split the fuser unit (see page 1-6-18).
2. Remove the heater lamp (see page 1-6-21).
3. Remove the heat roller (see page 1-6-22).
4. Remove the screw.
5. Remove the thermistor.

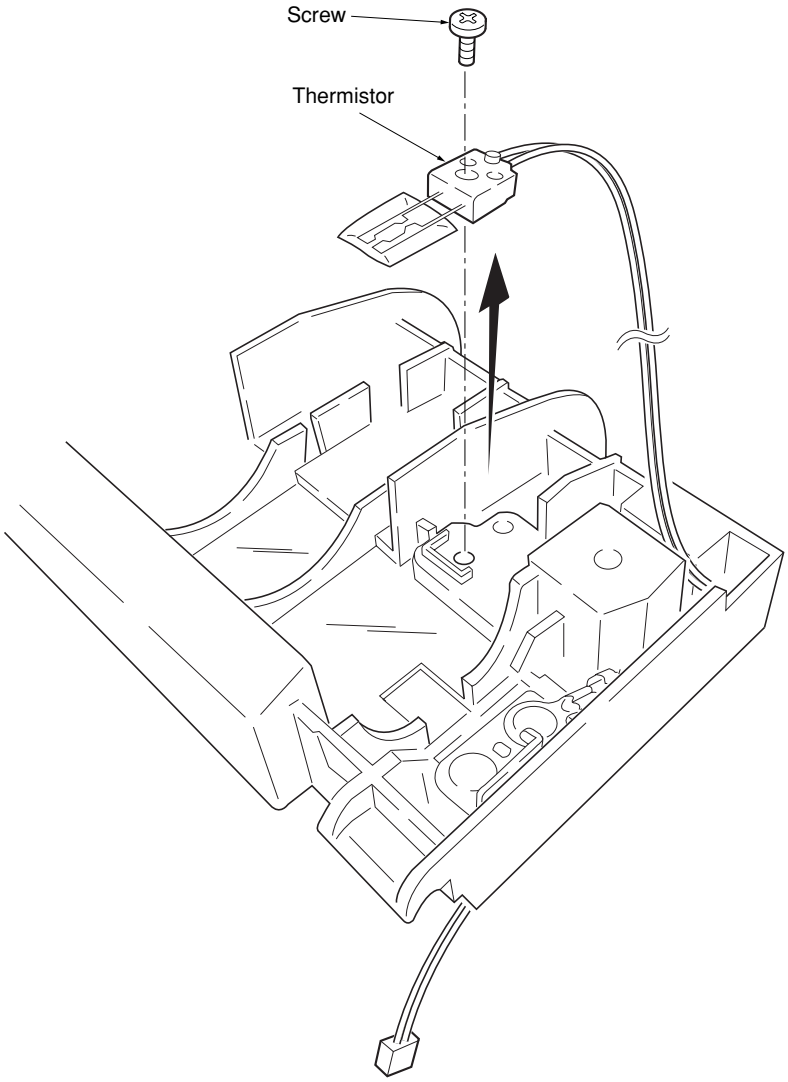

Figure 1-6-27 Removing the thermistor

(5) Removing the thermal cutout

CAUTION
• Do not bend the terminals of the thermal cutout.

1. Remove and split the fuser unit (see page 1-6-18).
2. Remove the heater lamp (see page 1-6-21).
3. Remove the heat roller (see page 1-6-22).
4. Remove two screws.
5. Remove the thermal cutout.

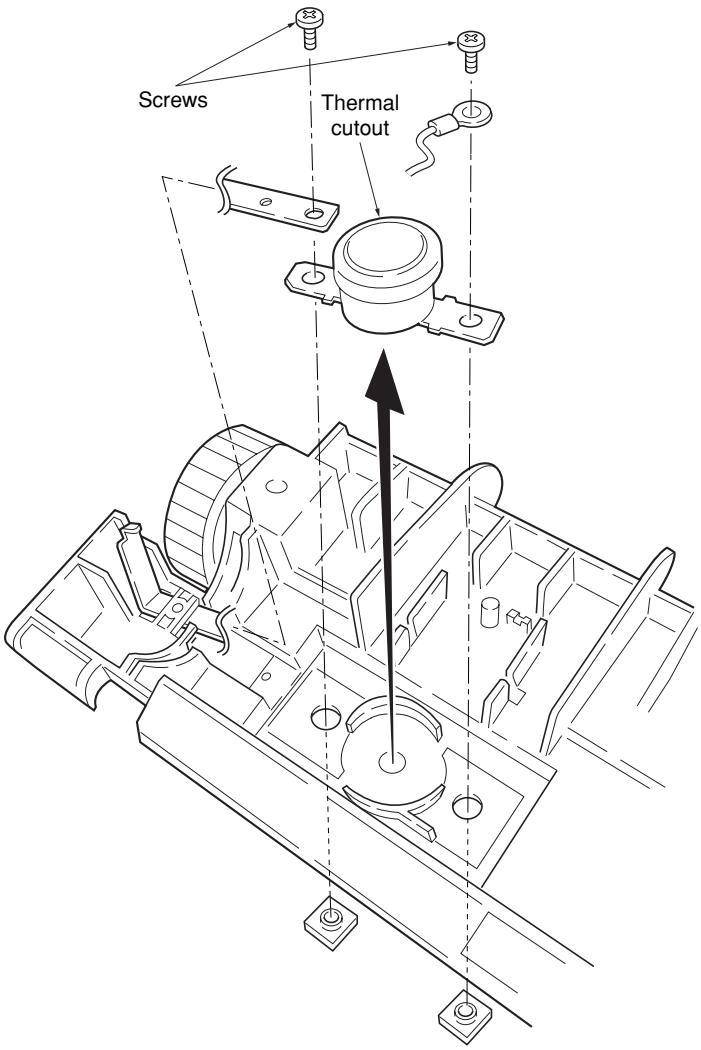

Figure 1-6-28 Removing the thermal cutout

(6) Removing the press roller

WARNING

- The press roller is extremely hot immediately after the machine was running. Allow substantial period of time until it cools down.

1. Remove and split the fuser unit (see page 1-6-18).
2. Remove the press roller from the fuser unit.

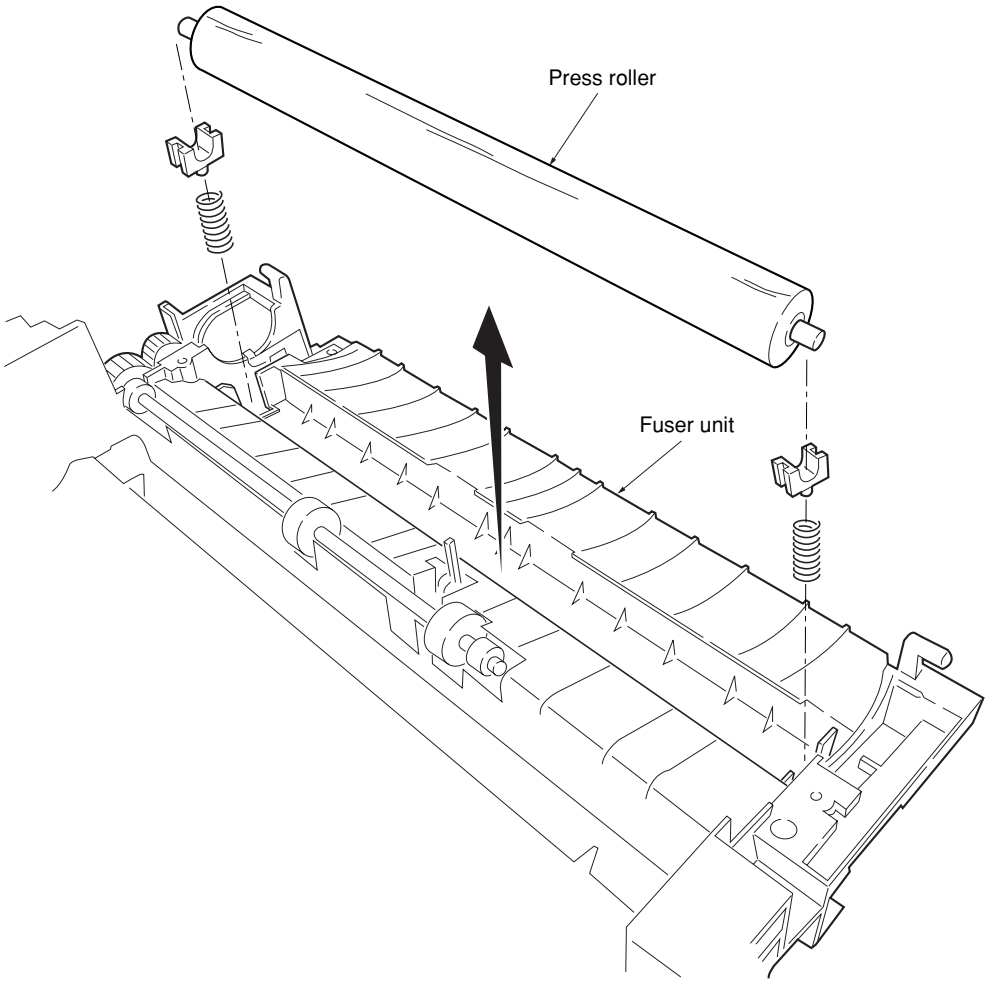

Figure 1-6-29 Removing the press roller

1-6-10 Removing the scanner unit

1. Remove the right and left cover (see page 1-6-4).
2. Remove the speaker (see page 1-6-10).
3. Remove five connectors and two flexible flat cables from the scanner PWB.
4. Remove five screws and then remove the scanner PWB.

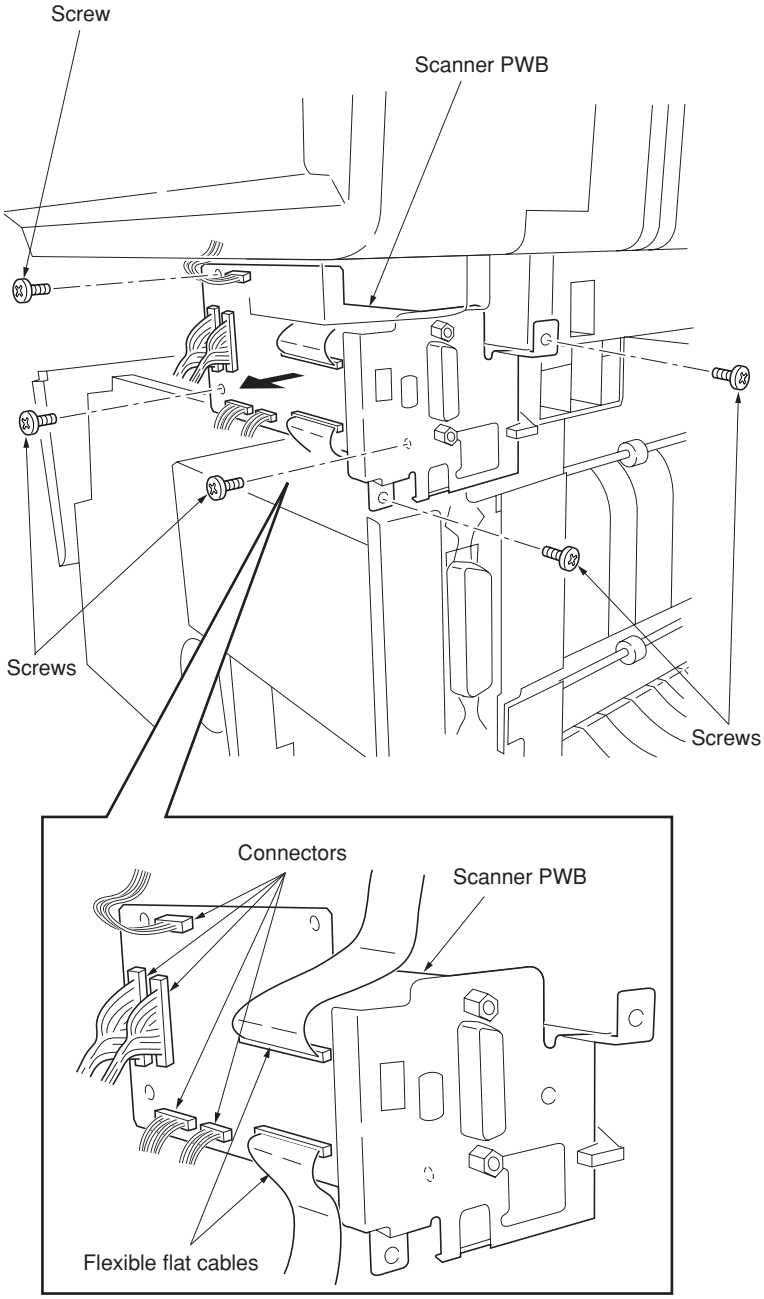

Figure 1-6-30 Removing the scanner PWB

4. Remove two screws.
5. Slide the scanner unit and then remove the scanner unit.

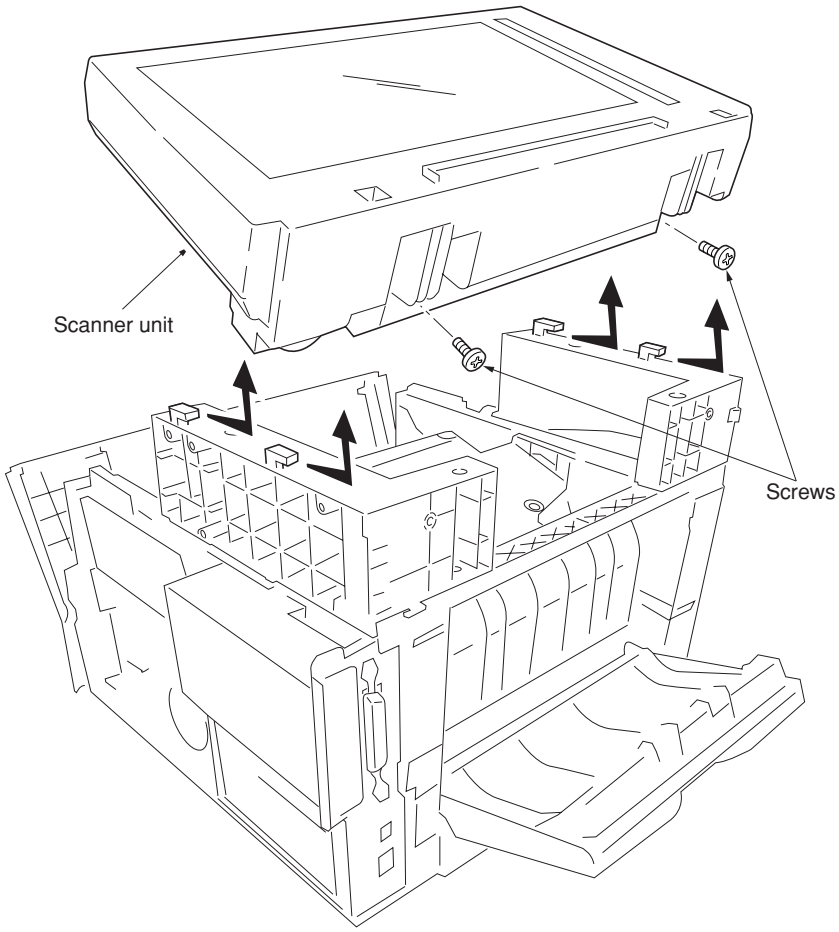

Figure 1-6-31 Removing the scanner unit

1-6-11 Removing the laser scanner unit and the eraser lamp

1. Remove the scanner unit (see page 1-6-27).
2. Remove two screws and then remove grounding plate.
3. Remove each two screws and then remove the right and left scanner stays.

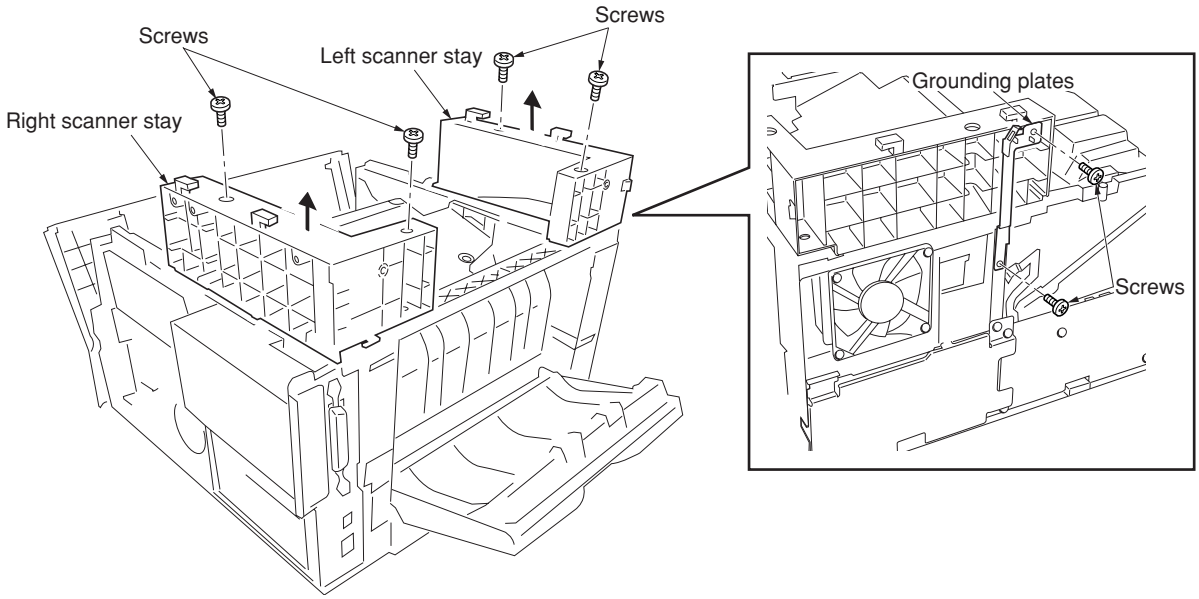

Figure 1-6-32 Removing the right and left stays

4. Remove four connectors.
5. Remove six screws and then remove the LSU shield.
   * When refitting the LSU shield, tighten a screw in order of ④ from ①.

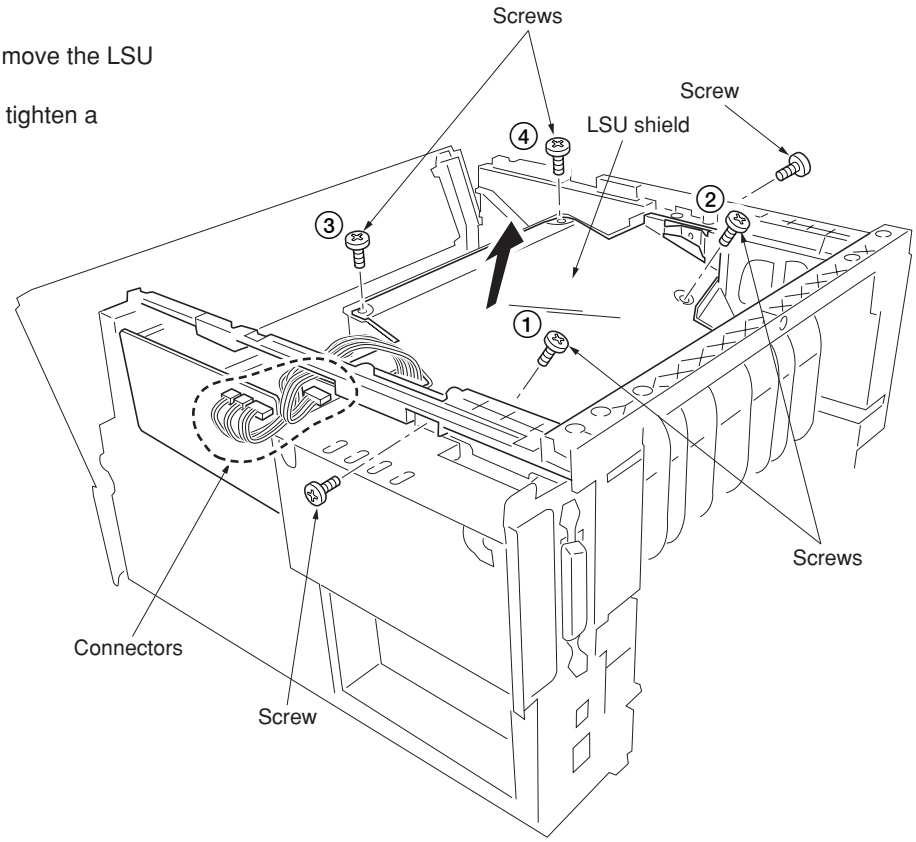

Figure 1-6-33 Removing the LSU shield

6. Remove three screws.
7. Remove two connectors from the laser scanner unit.
8. Remove the laser scanner unit.
   * When refitting the laser scanner unit, tighten a screw in order of ③ from ①.

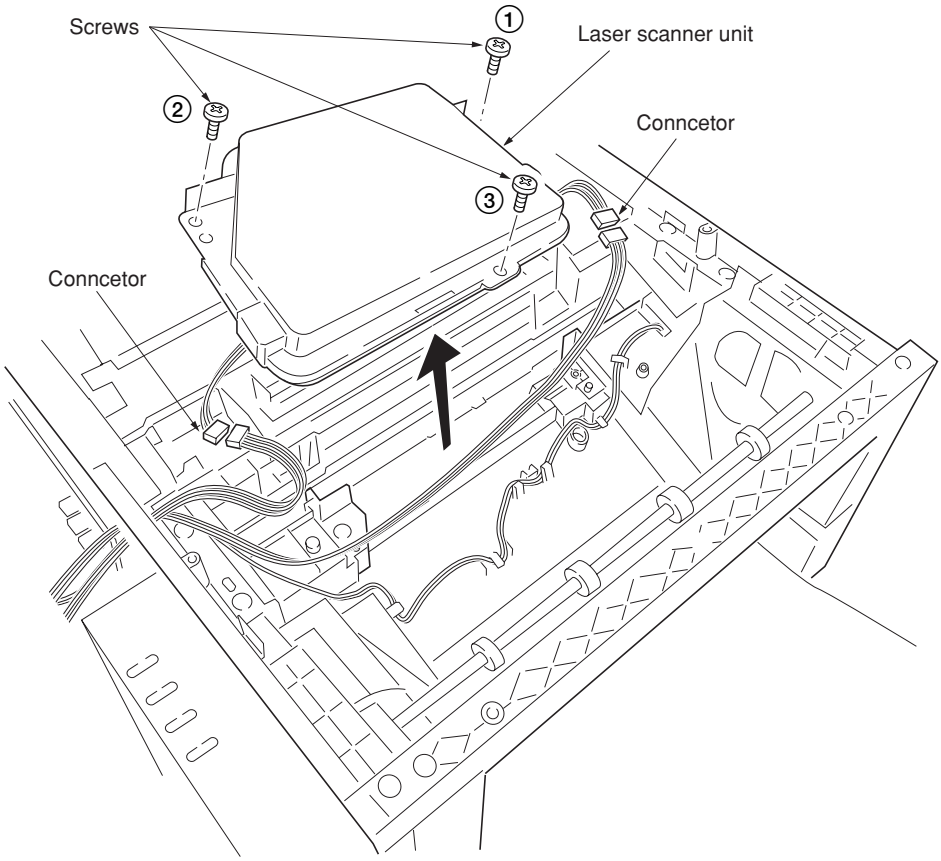

Figure 1-6-34 Removing the laser scanner unit

9. Remove the eraser lamp.

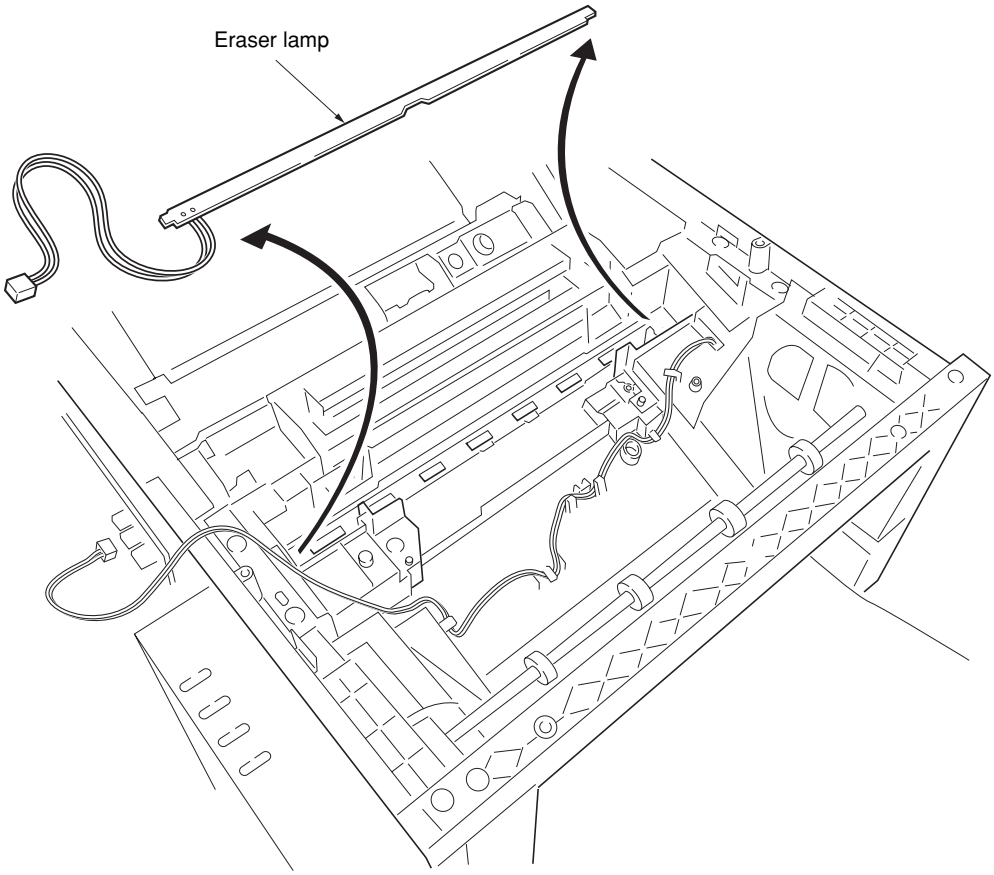

Figure 1-6-35 Removing the eraser lamp

1-6-12 Removing the ISU unit

1. Unhook two hooks by using screw driver through the holes and then remove the operation unit.

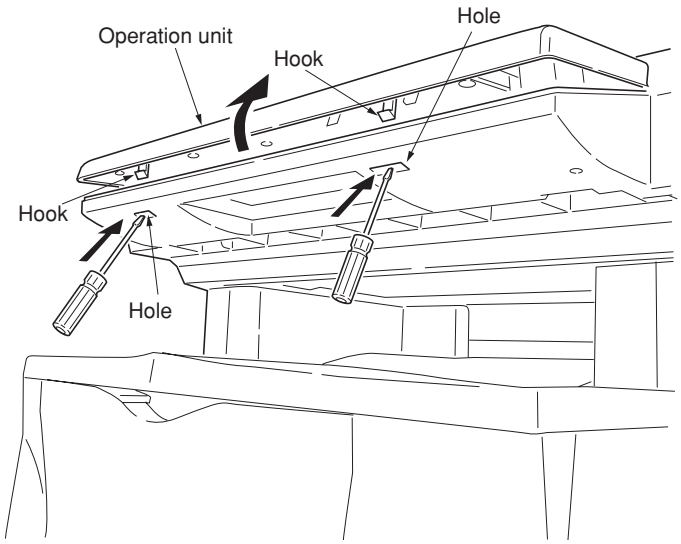

Figure 1-6-36 Removing the operation unit

2. Remove two screws and then remove the original holder cover.

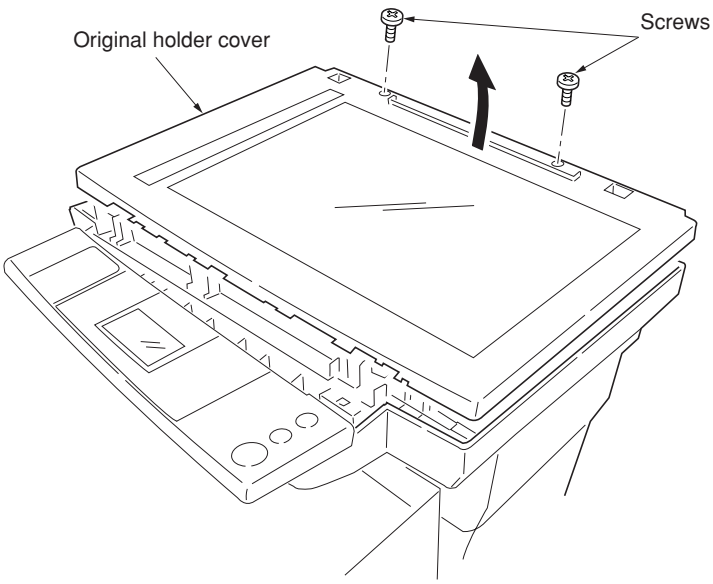

Figure 1-6-37 Removing the original holder cover

3. Remove two screws and then remove two grounding plates.
4. Remove the stopper ring and then detach the scanner shaft.
   * Detach the shaft taking care to tilt it as little as possible.

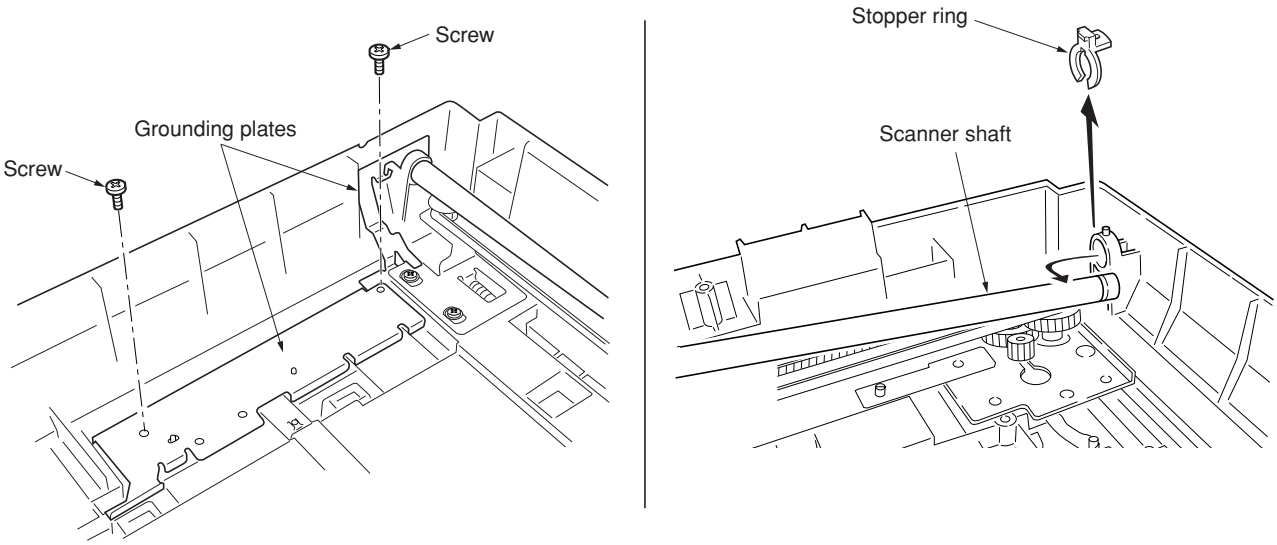

Figure 1-6-38 Detaching the scanner shaft

5. Remove the flexible flat cable from the ISU PWB's connector.
6. Remove the scanner belt from the belt hook of scanner unit.
7. Remove the ISU unit from the scanner shaft.
   * Remove the ISU unit taking care not to lose the M4 nut located in the ISU unit.

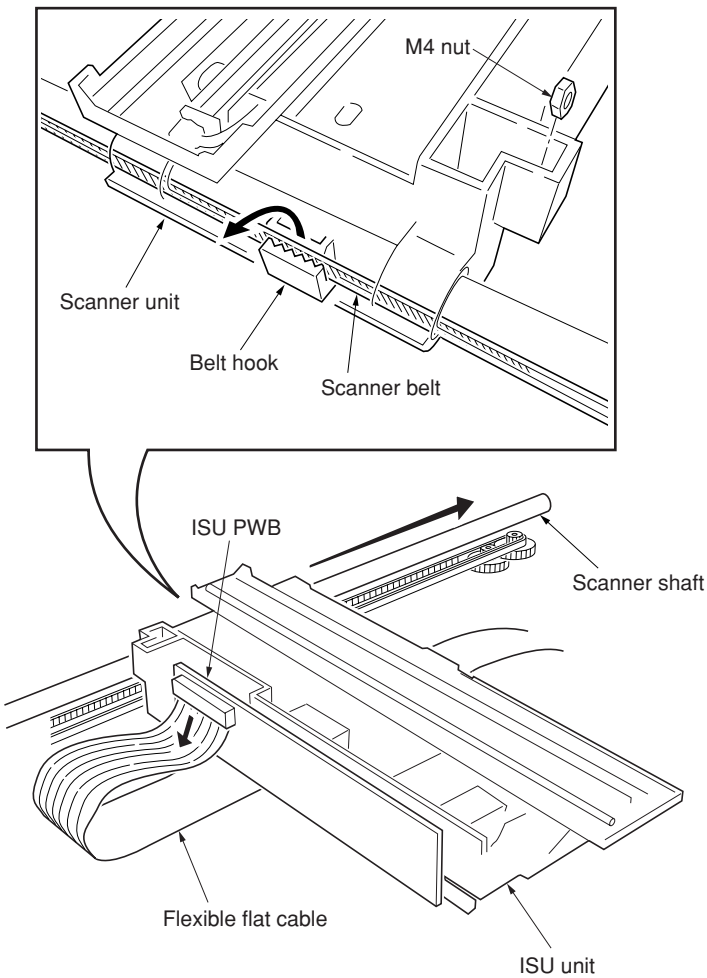

Figure 1-6-39 Removing the ISU unit

1-6-13 Removing the exposure lamp

1. Remove the ISU unit (see page 1-6-32).
2. Remove two connectors from the inverter PWB.
3. Remove the screw and then remove the inverter PWB.

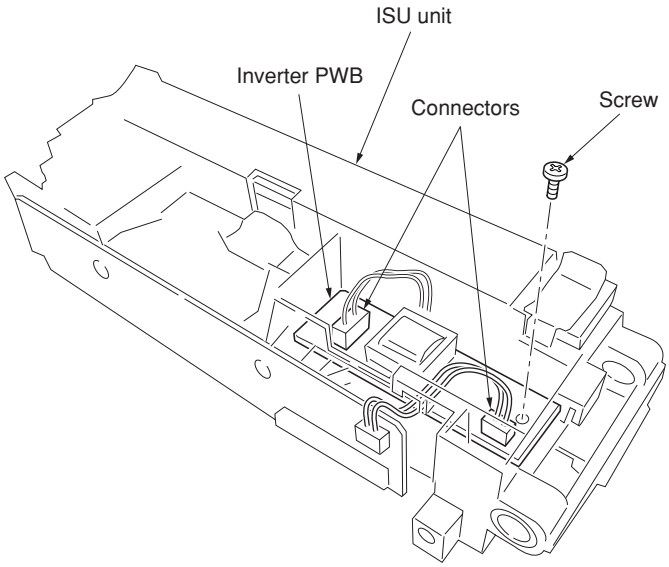

Figure 1-6-40 Removing the inverter PWB

4. While unhooking the hook and then slide the exposure lamp mount.

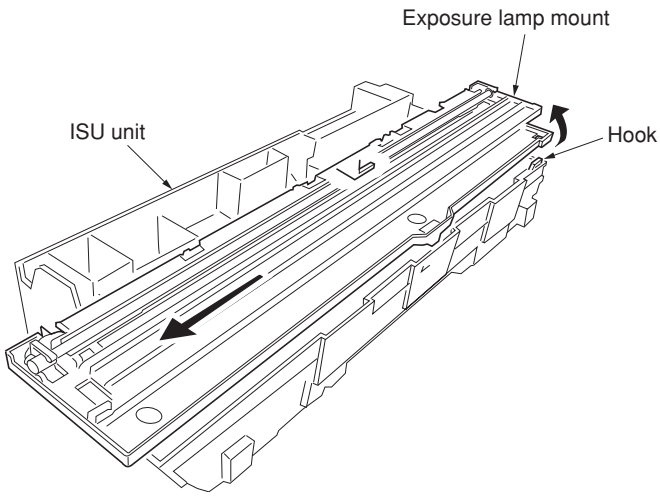

Figure 1-6-41 Removing the exposure lamp mount

5. Remove the exposure lamp and cables from the exposure lamp mount.
   - Do not touch the glass surfaces of the exposure lamp with bare hands.

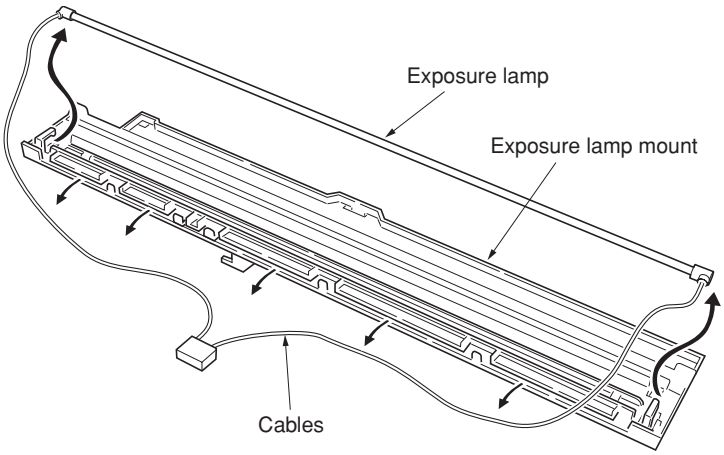

Figure 1-6-42 Removing the exposure lamp

1-6-14 Removing the scanner mirror A

1. Remove the ISU unit (see page 1-6-32).
2. Remove the exposure lamp (see page 1-6-34).
3. Unhook two mirror A holders and then remove the scanner mirror A.

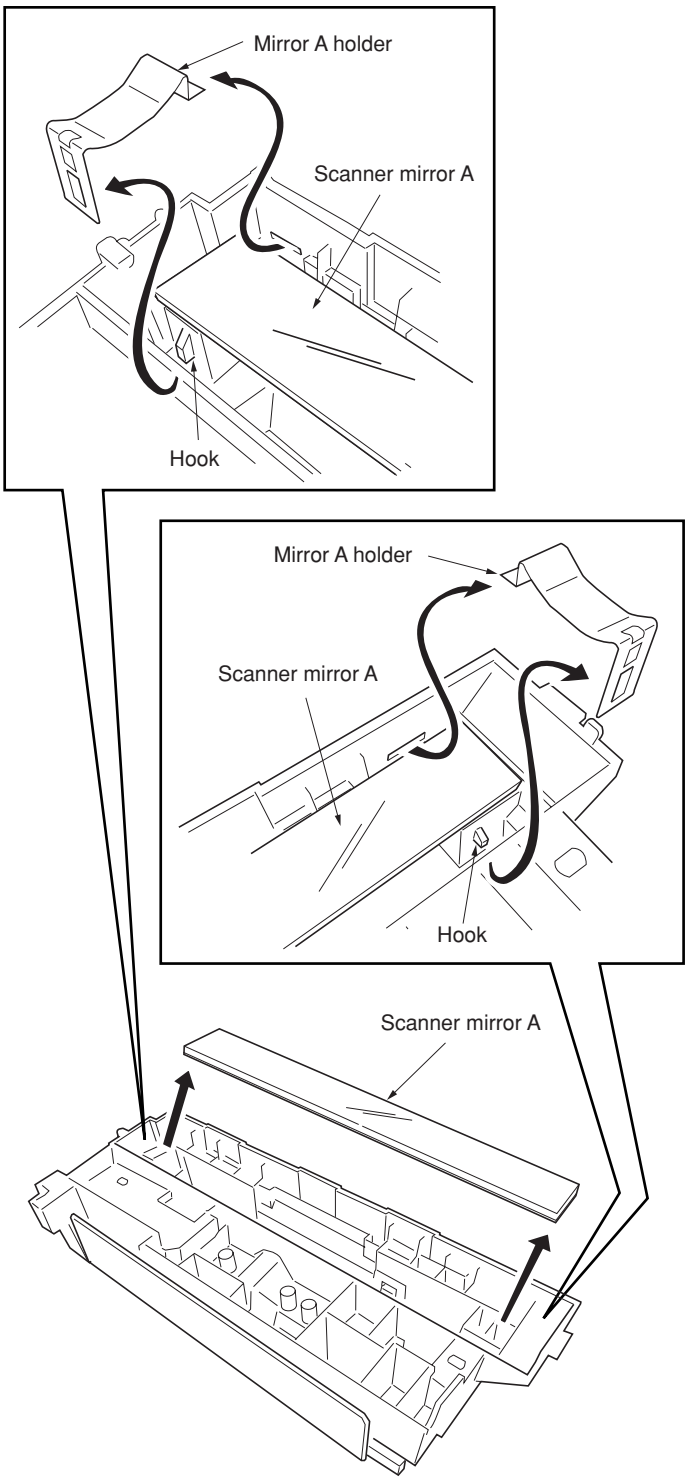

Figure 1-6-43 Removing the scanner mirror A

1-6-15 Removing the scanner motor

1. Remove the original holder cover (see page 1-6-32).
2. Remove the right cover (see page 1-6-4).
3. Remove the speaker (see page 1-6-10).
4. Remove the connector from the scanner PWB.

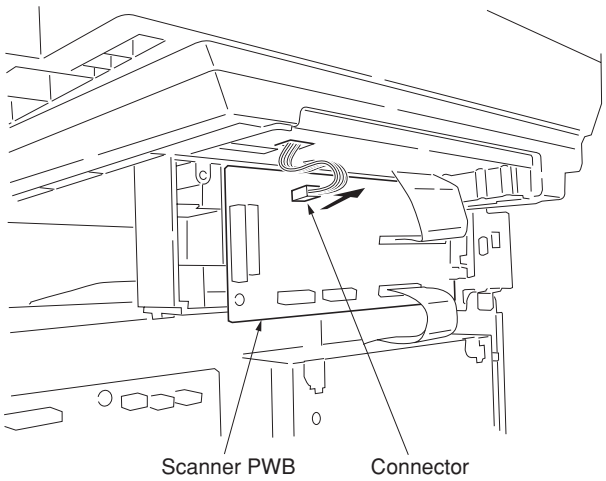

Figure 1-6-44 Removing the scanner motor (1)

5. Remove two screws and then remove two grounding plates.

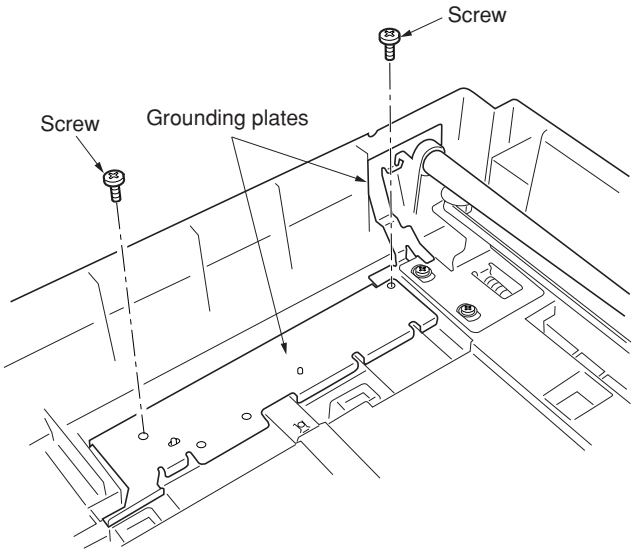

Figure 1-6-45 Removing the scanner motor (2)

6. Loosen two screws and then release the tension of a scanner belt.
7. Remove the scanner belt.

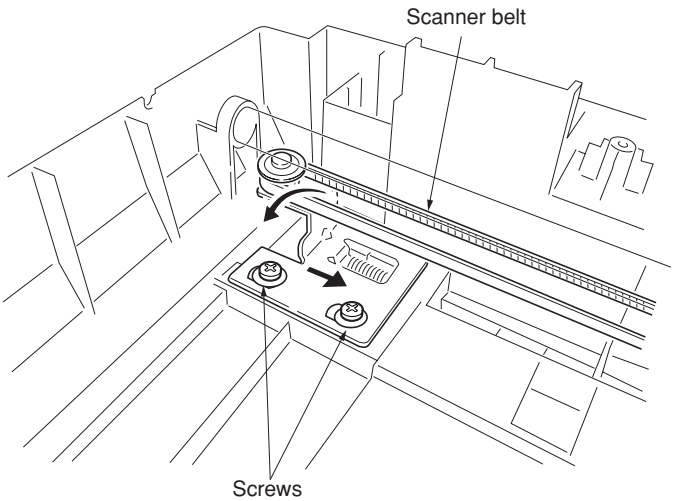

Figure 1-6-46 Removing the scanner motor (3)

8. Remove three screws and then remove the grounding plate.

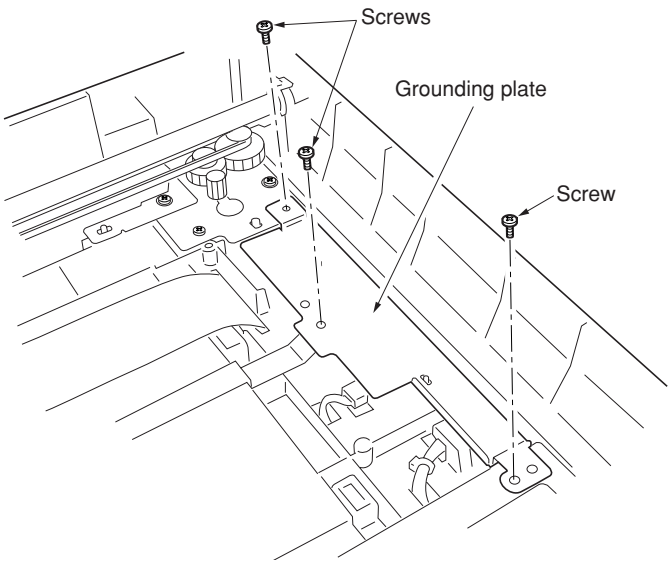

Figure 1-6-47 Removing the scanner motor (4)

9. Remove the stopper ring and then detach the scanner shaft.
   * Detach the shaft taking care to tilt it as little as possible.

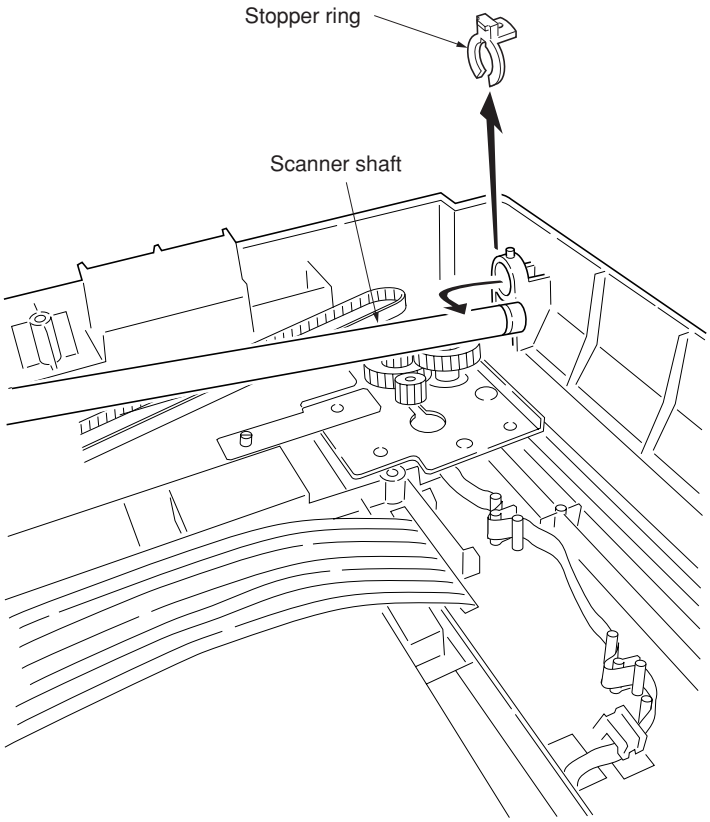

Figure 1-6-48 Removing the scanner motor (5)

10. Remove the cable from the cable clamps.
11. Remove four screws and then remove the scanner motor mount with scanner motor.

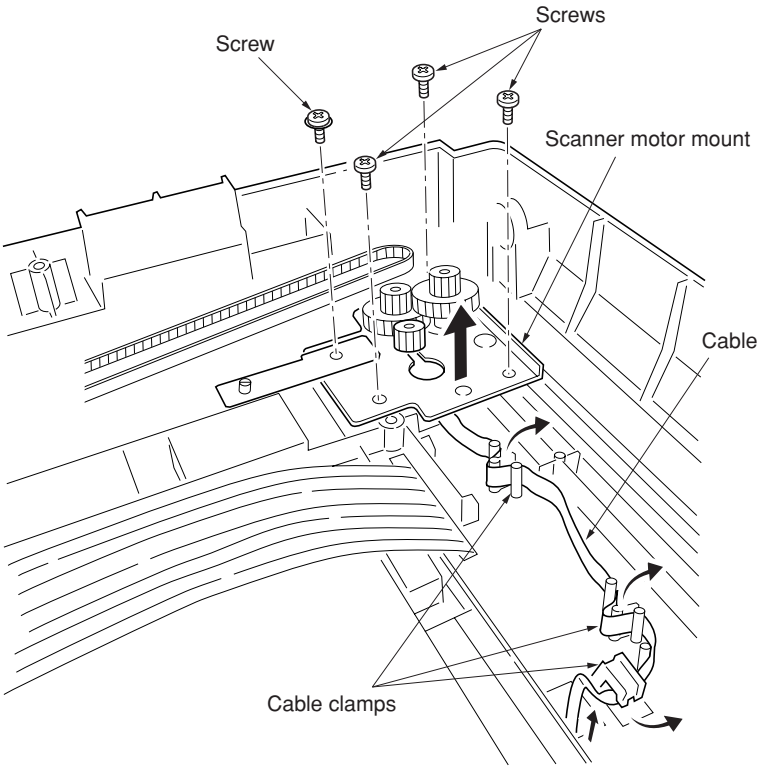

Figure 1-6-49 Removing the scanner motor (6)

12. Remove the screw and then remove the scanner motor.

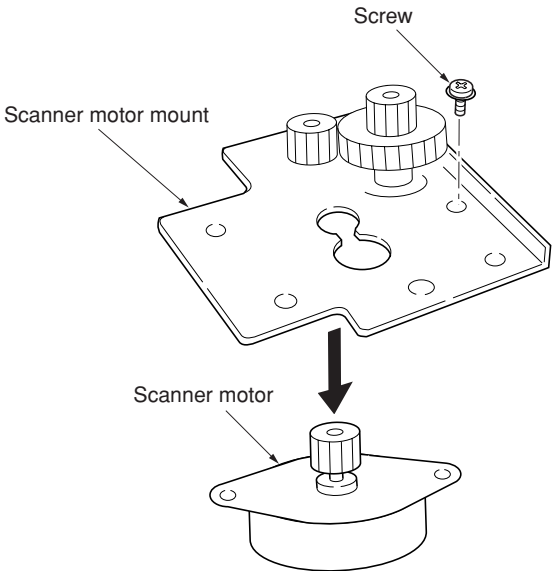

Figure 1-6-50 Removing the scanner motor (7)

1-6-16 Removing the main charger unit

1. Remove the process unit from the machine (see page 1-6-2).
2. Unlatch three snaps, and remove the main charger cap.
3. Draw the main charger unit in the direction of arrow Ⓐ, then pull it out in the direction of arrow Ⓑ.

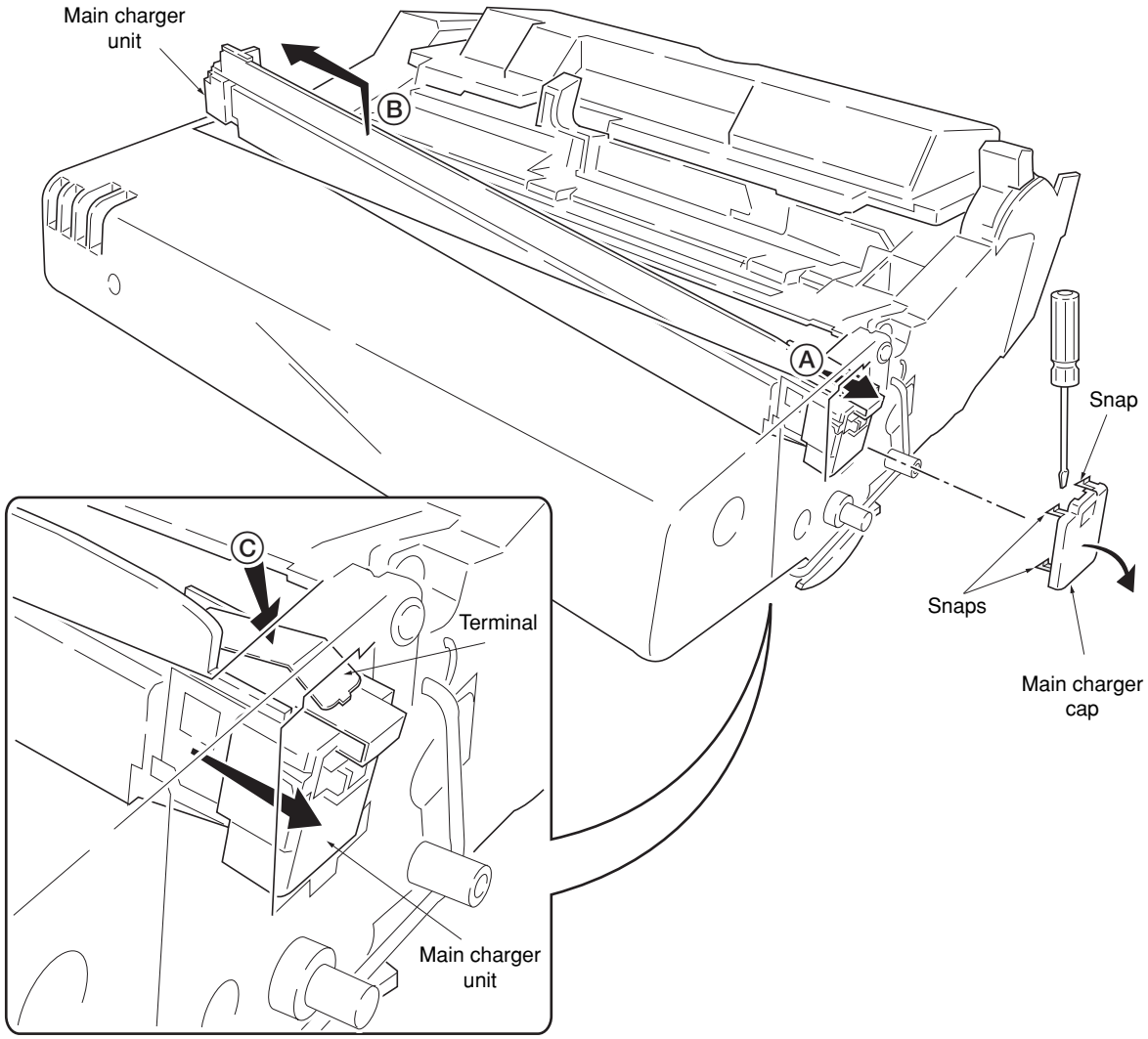

Figure 1-6-51 Removing the main charger unit

CAUTION

• When refitting the main charger unit, hold terminal down Ⓒ, then push frontwards. Use care not to deform the terminal.

1-6-17 Adjustment the maintenance mode

(1) Adjusting the leading edge registration of image printing

Make the following adjustment if there is a regular error between the leading edges of the copy image and original.

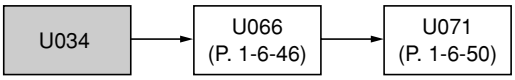

Caution:

Check the copy image after the adjustment. If the image is still incorrect, perform the above adjustments in maintenance mode.

Procedure

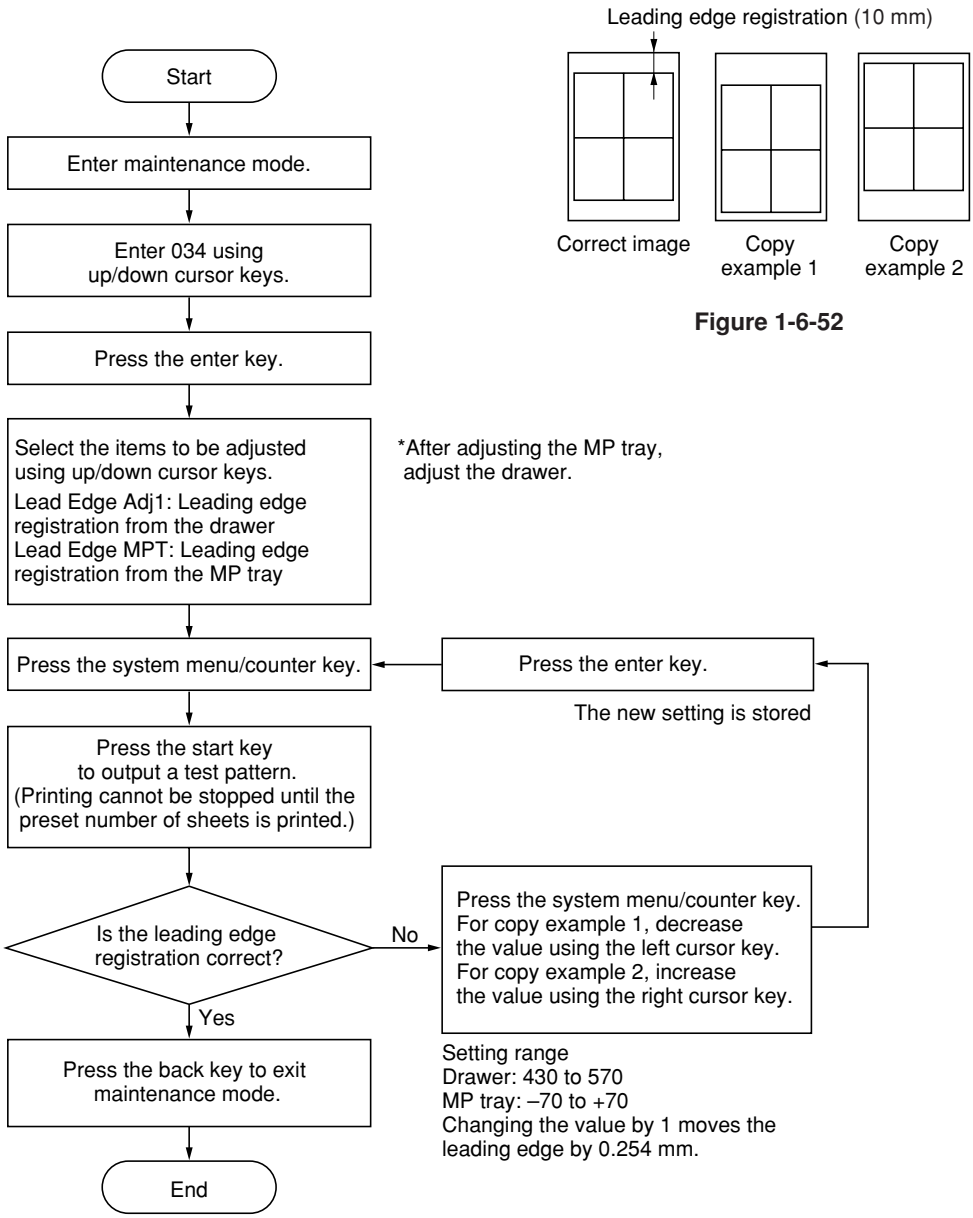

Figure 1-6-52

(2) Adjusting the center line of image printing

Make the following adjustment if there is a regular error between the center lines of the copy image and original when paper is fed from the cassette.

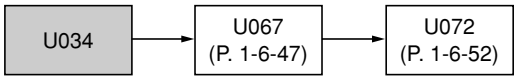

Caution:

Check the copy image after the adjustment. If the image is still incorrect, perform the above adjustments in maintenance mode.

Procedure

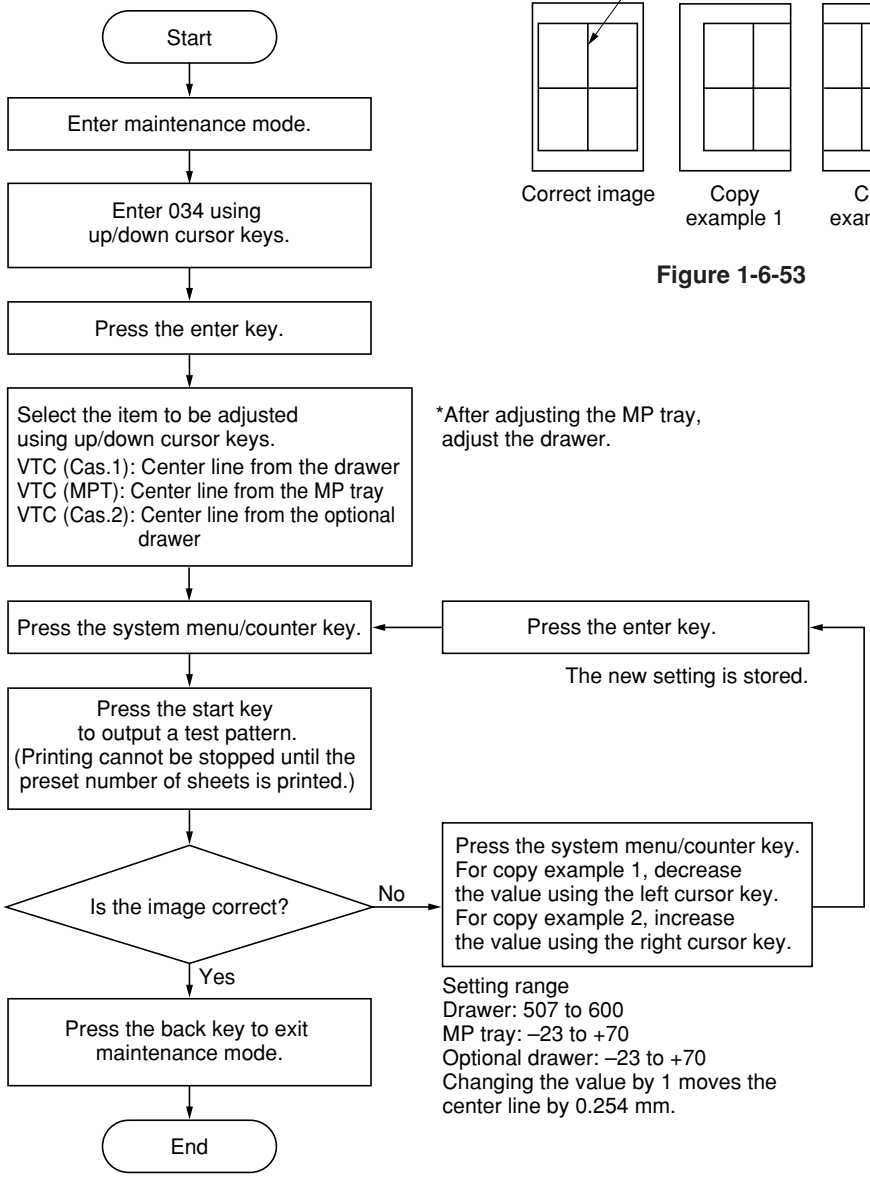

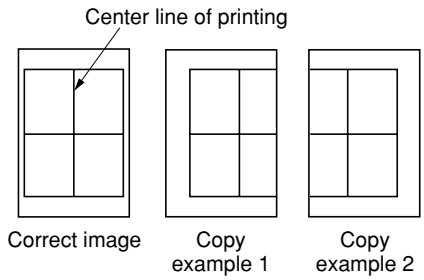

Figure 1-6-53

(3) Adjusting the amount of slack in the paper

Make the following adjustment if the leading edge of the copy image is missing or varies randomly, or if the copy paper is Z-folded.

Procedure

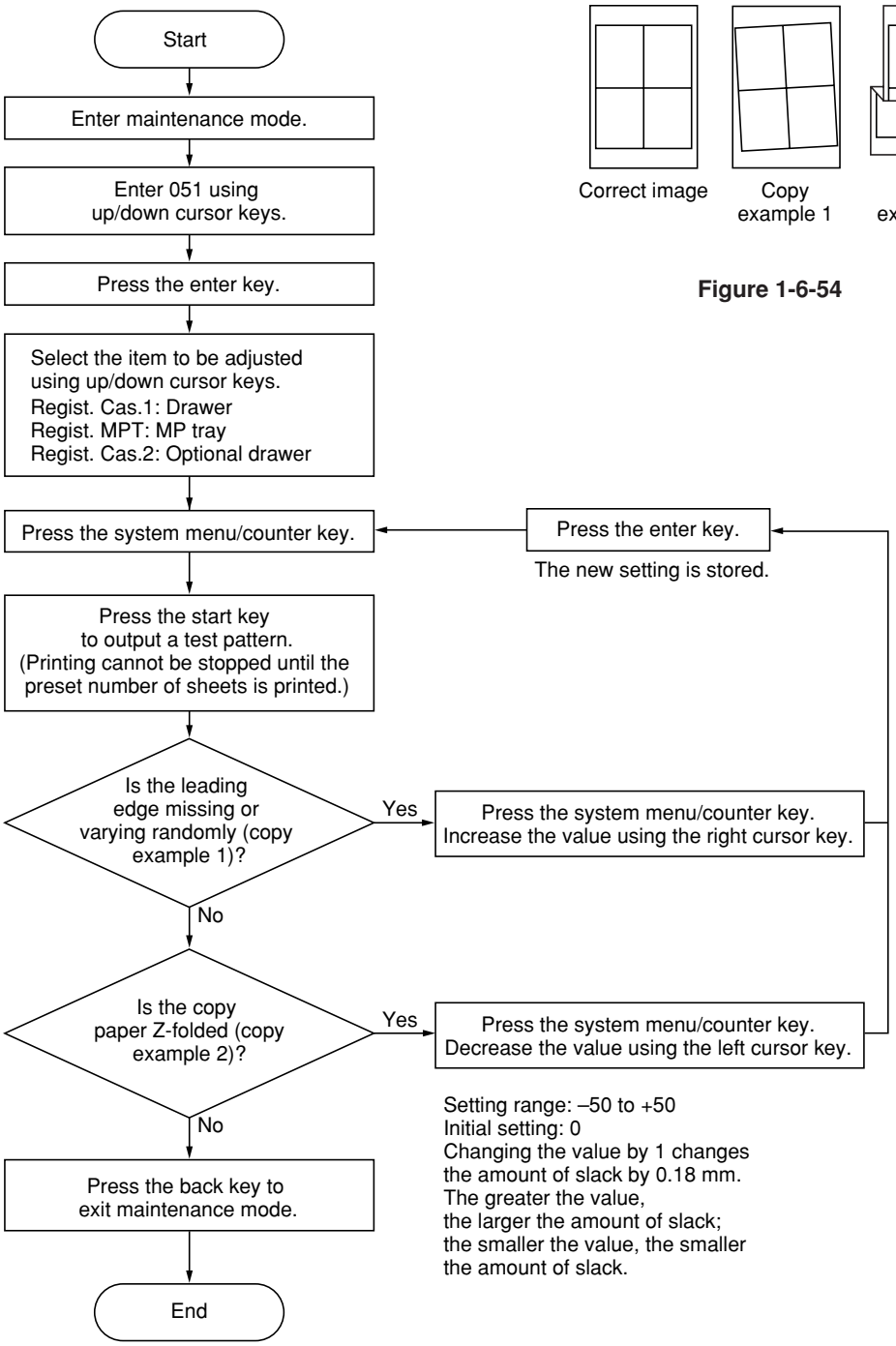

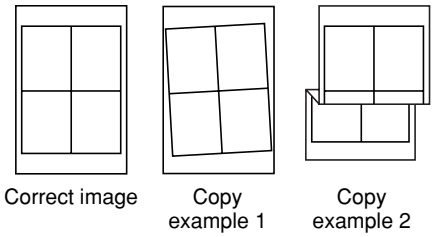

Figure 1-6-54

(4) Adjusting magnification of the scanner in the main scanning direction

Perform the following adjustment if the magnification in the main scanning direction is not correct.

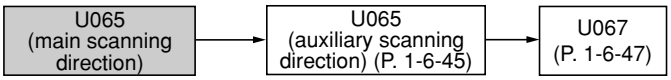

Caution:

Before making the following adjustment, ensure that the above adjustments have been made in maintenance mode. Also, perform "(5) Adjusting magnification of the scanner in the auxiliary scanning direction" (page 1-6-45) and "(7) Adjusting the scanner center line" (page 1-6-47) after this adjustment.

Procedure

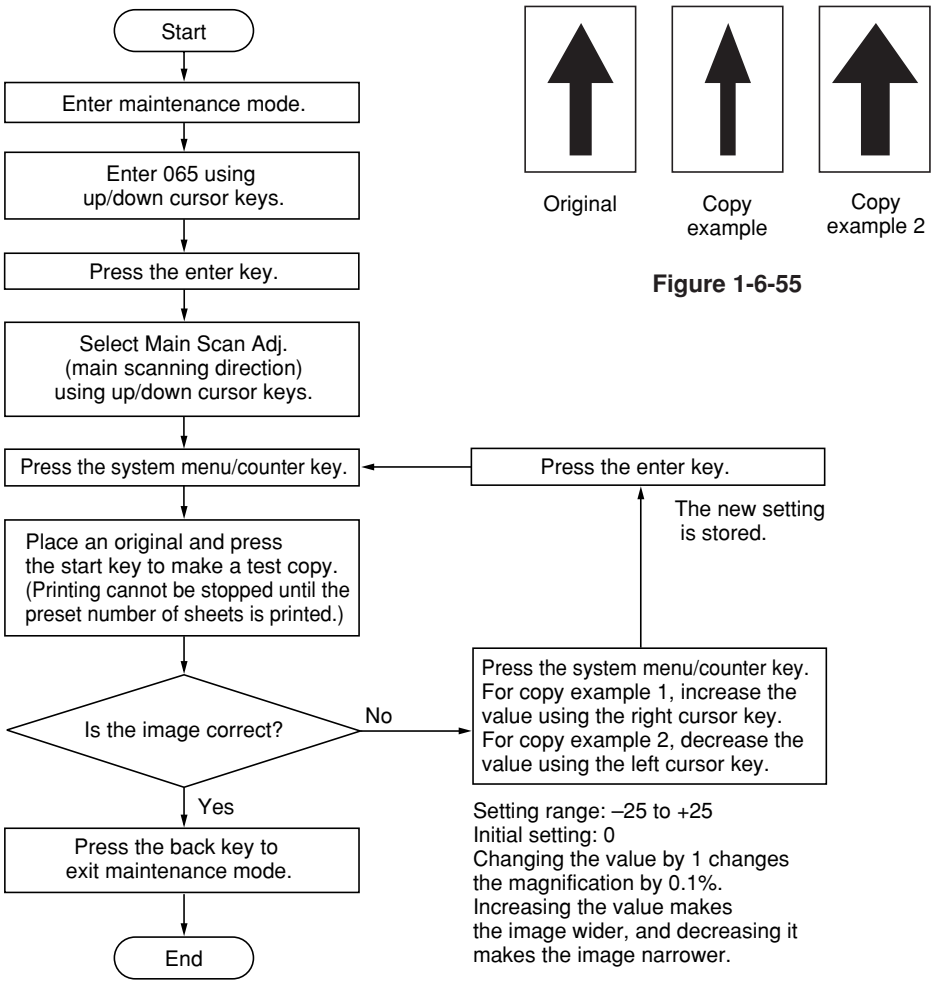

Figure 1-6-55

(5) Adjusting magnification of the scanner in the auxiliary scanning direction

Perform the following adjustment if the magnification in the auxiliary scanning direction is not correct.

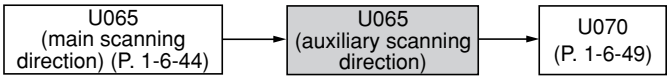

Caution:

Before making the following adjustment, ensure that the above adjustments have been made in maintenance mode.

Procedure

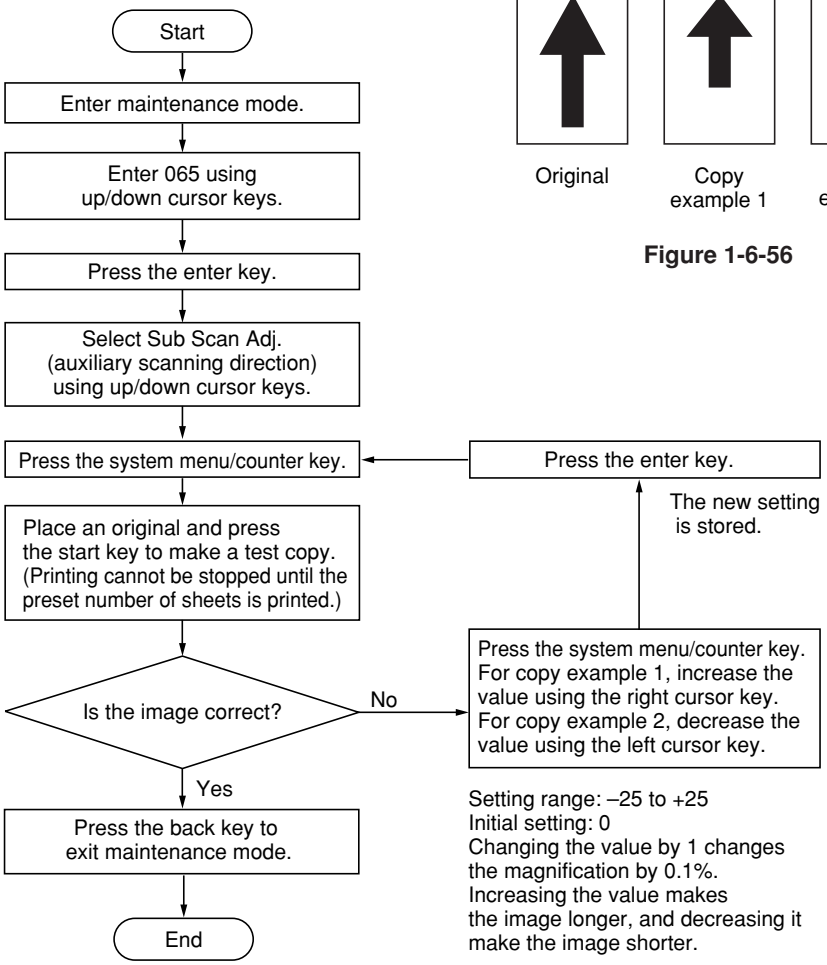

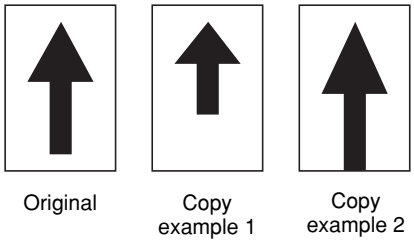

Figure 1-6-56

(6) Adjusting the scanner leading edge registration

Perform the following adjustment if there is regular error between the leading edges of the copy image and original.

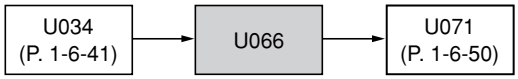

Caution:

Before making the following adjustment, ensure that the above adjustments have been made in maintenance mode.

Procedure

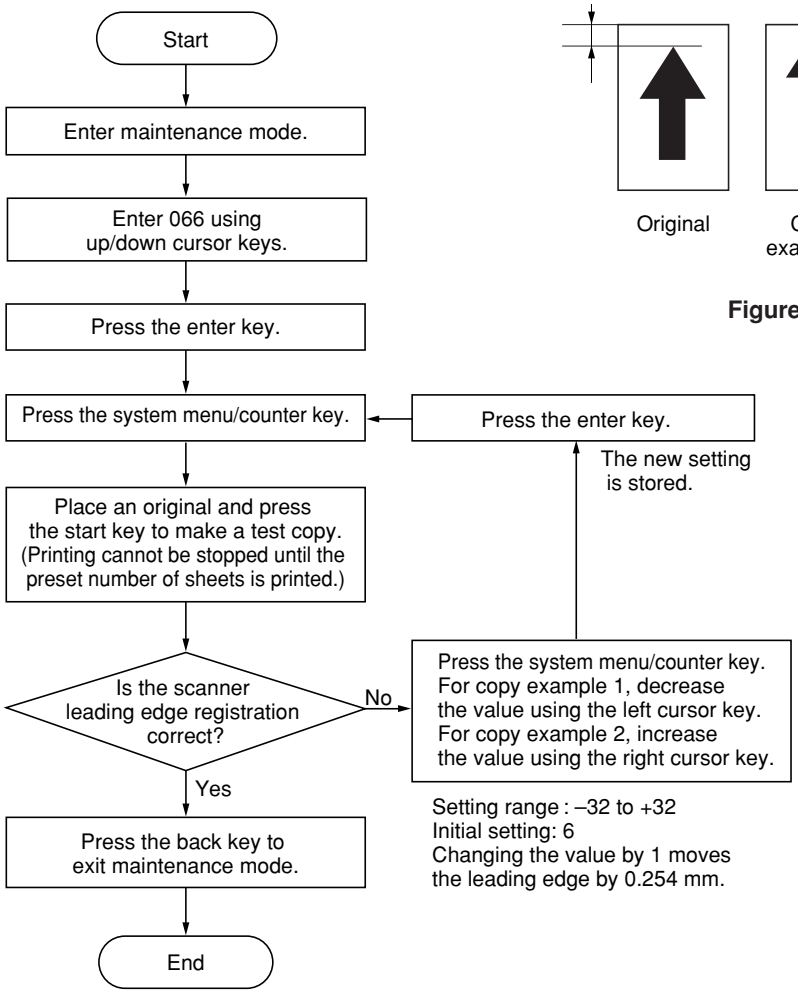

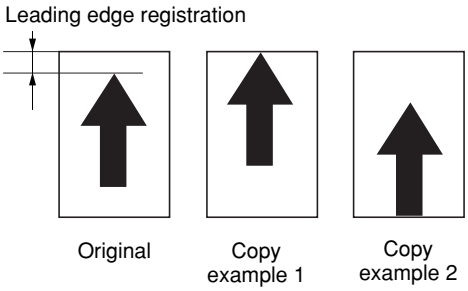

Figure 1-6-57

(7) Adjusting the scanner center line

Perform the following adjustment if there is a regular error between the center lines of the copy image and original.

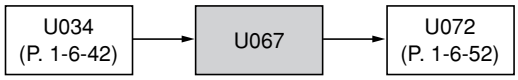

Caution:

Before making the following adjustment, ensure that the above adjustments have been made in maintenance mode.

Procedure

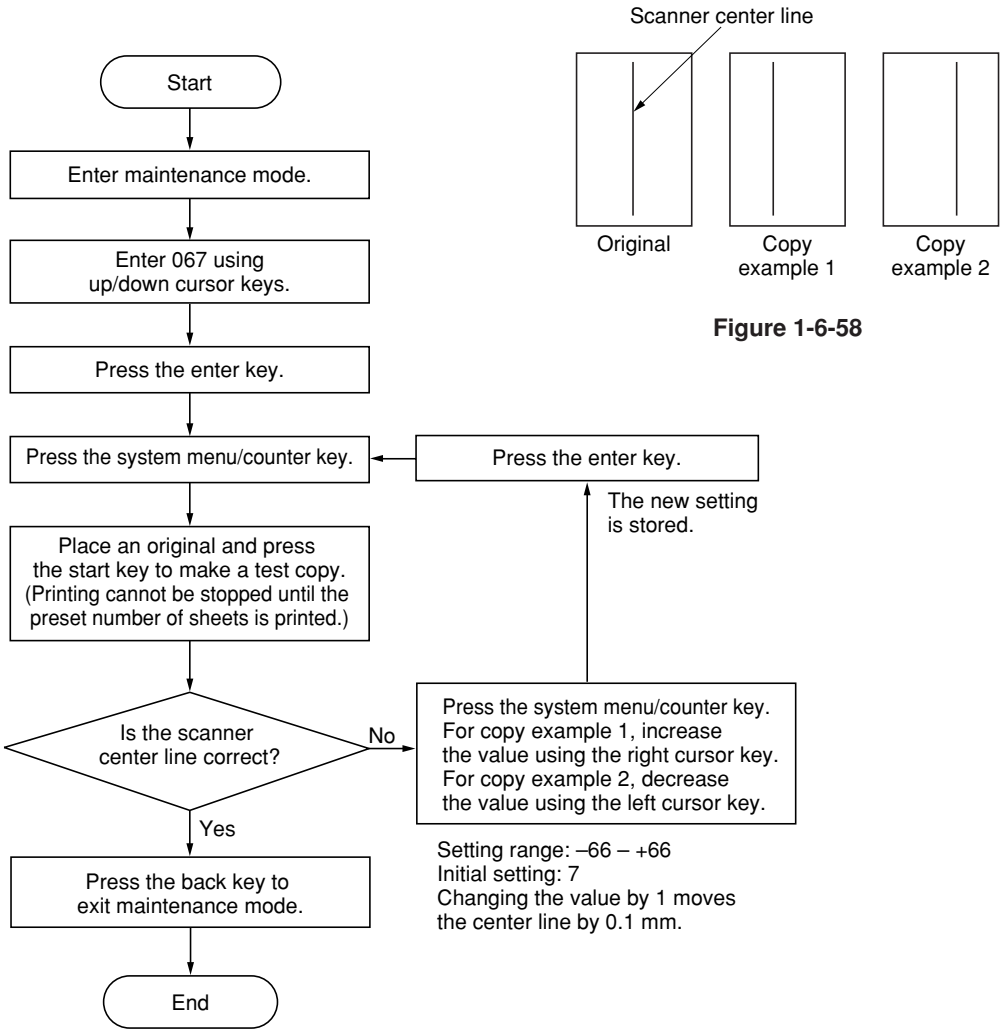

Figure 1-6-58

(8) Adjusting the margins for scanning an original on the contact glass

Perform the following adjustment if the margins are not correct.

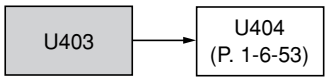

Caution:

Check the copy image after the adjustment. If the image is still incorrect, perform the above adjustments in maintenance mode.

Procedure

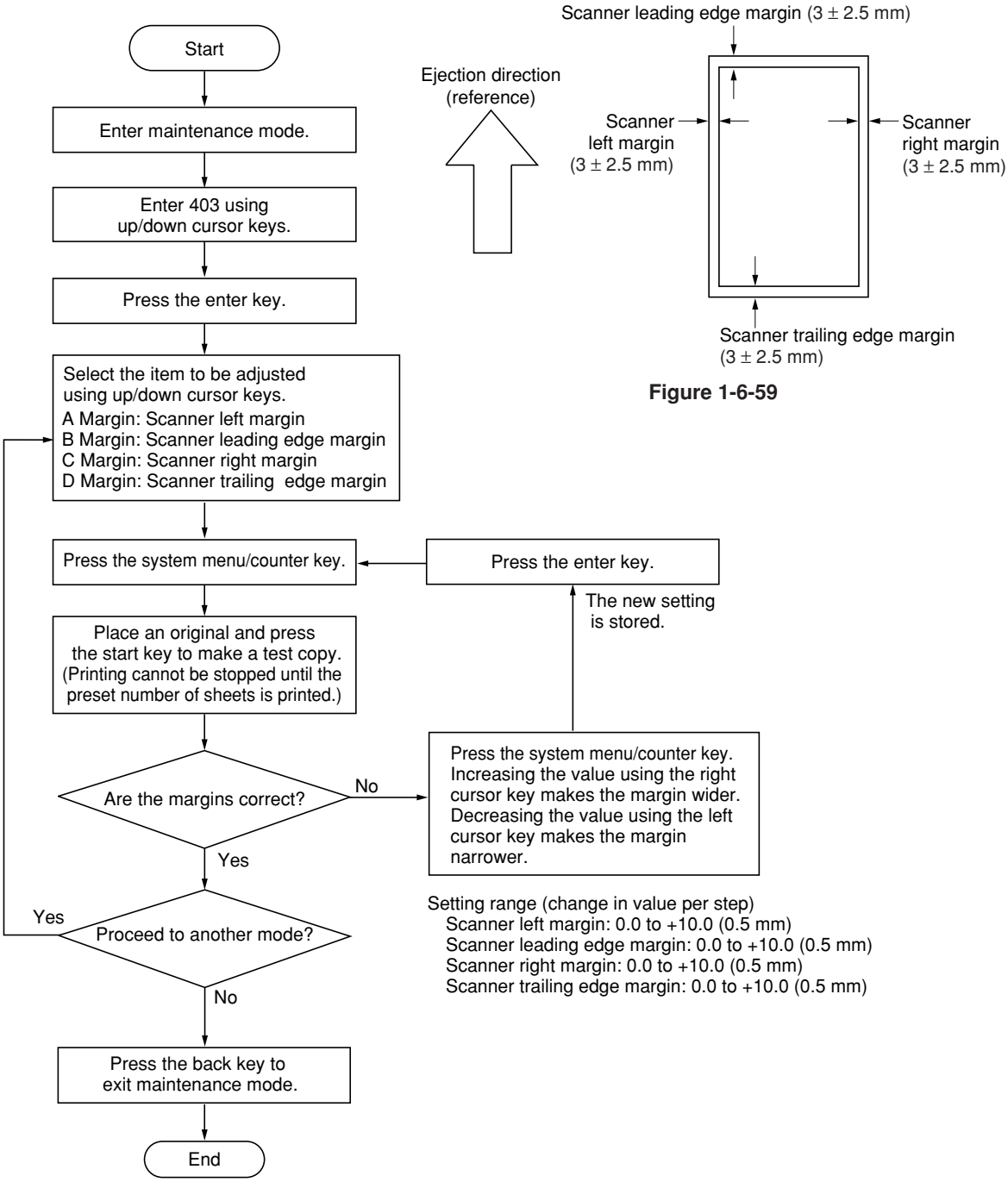

Figure 1-6-59

(9) Adjusting the DP magnification

Adjust magnification in the auxiliary scanning direction if magnification is incorrect when the DP is used.

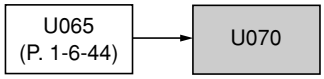

Caution:

Before making the following adjustment, ensure that the above adjustments have been made in maintenance mode.

Procedure

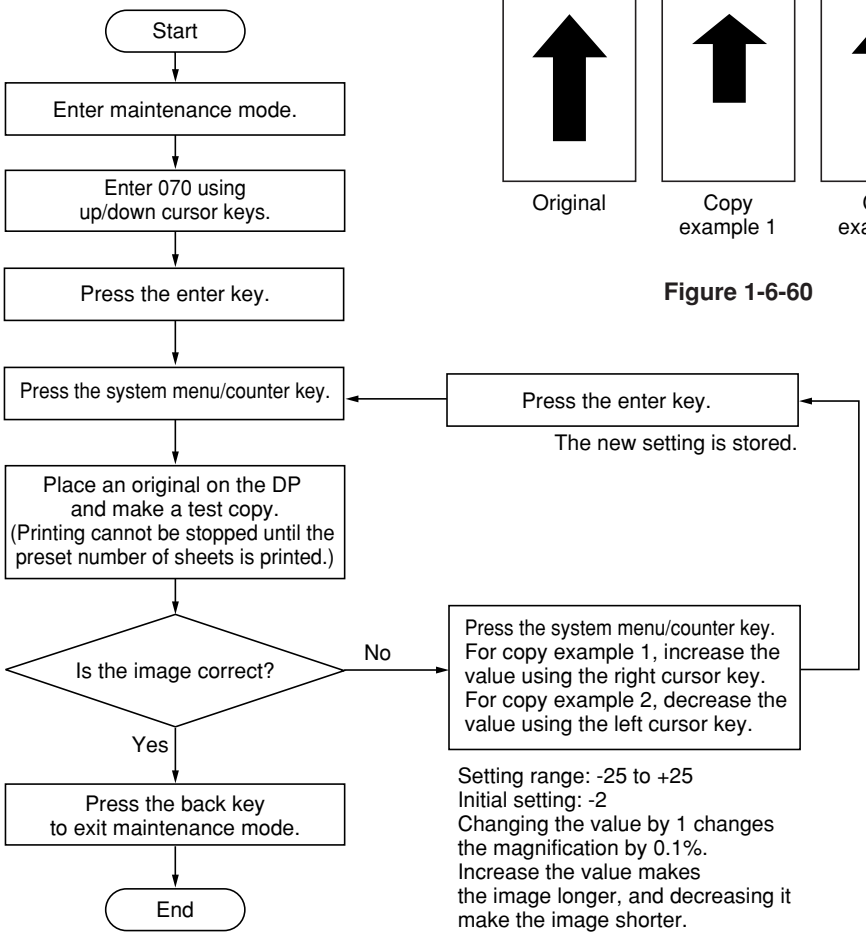

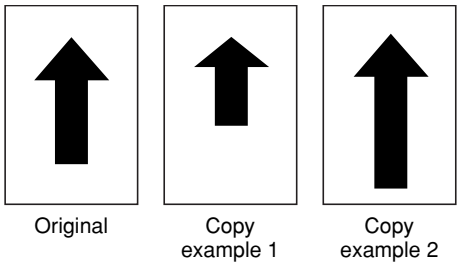

Figure 1-6-60

(10) Adjusting the DP leading edge registration

Perform the following adjustment if there is a regular error between the leading edge of the original and the copy image.

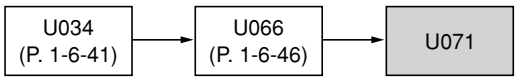

Caution:

Before making the following adjustment, ensure that the above adjustments have been made in maintenance mode.

Procedure

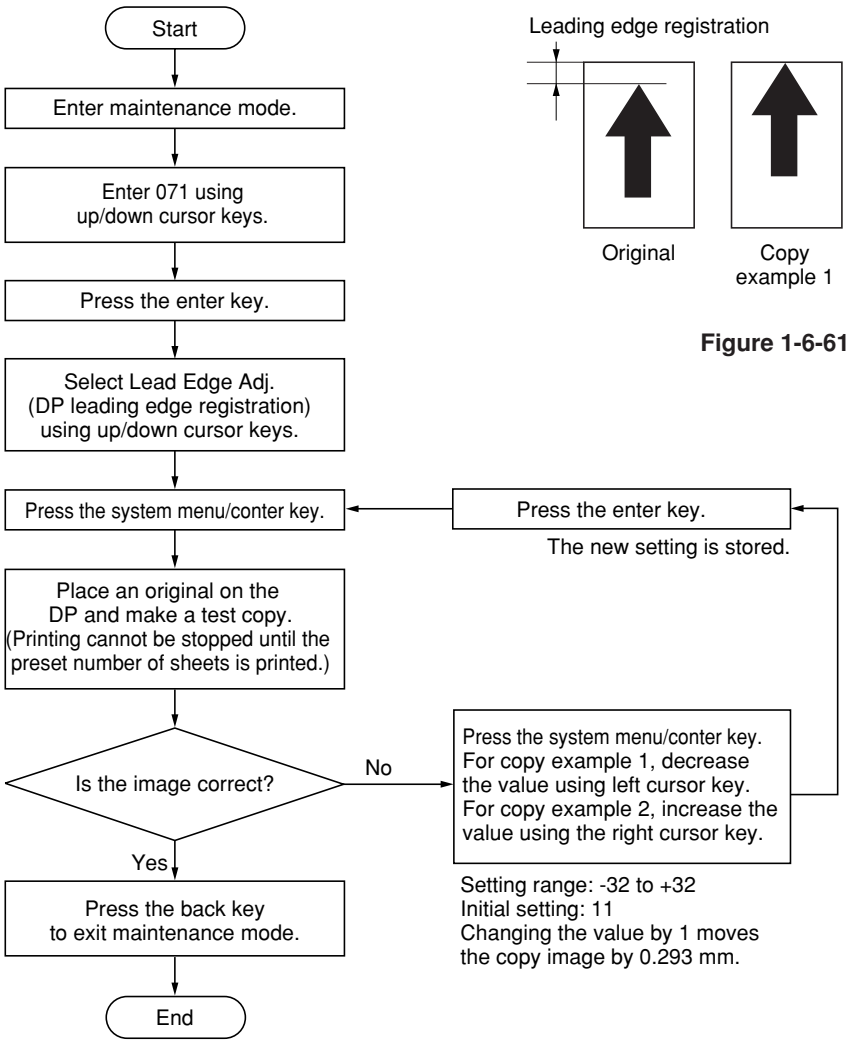

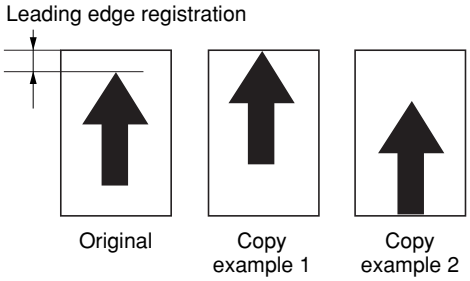

Figure 1-6-61

(11) Adjusting the DP trailing edge registration

Perform the following adjustment if the original scanning end position is not correct when the DP is used.

Caution:

If the copy image looks like copy example 2, clean the DP original scanning section.

Procedure

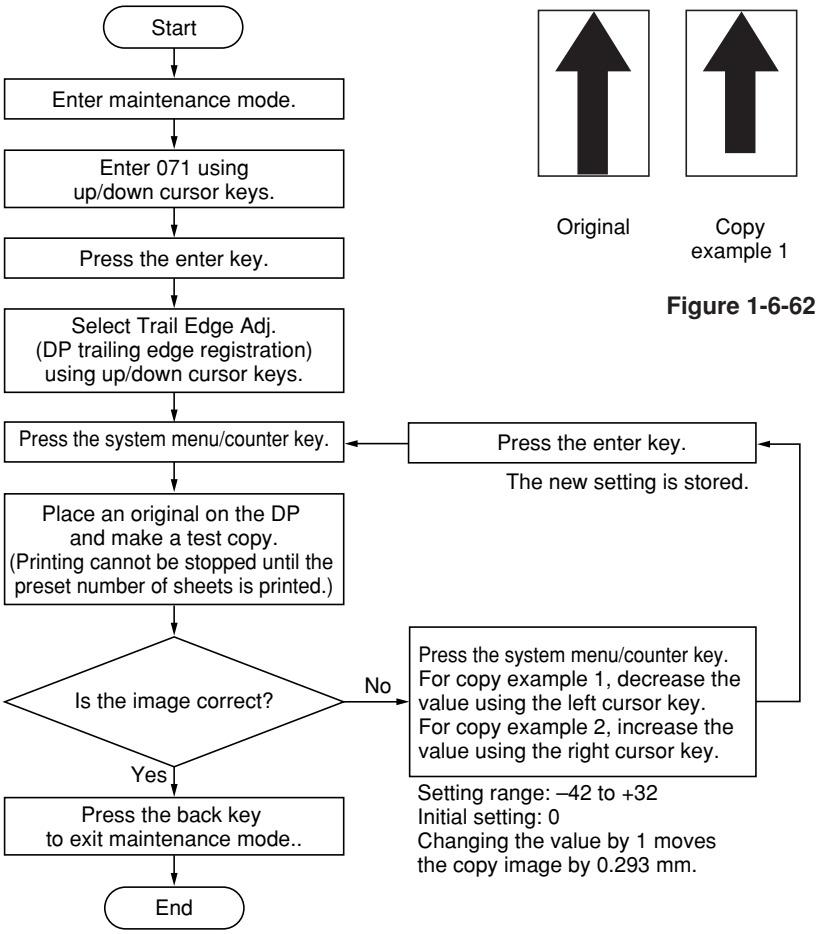

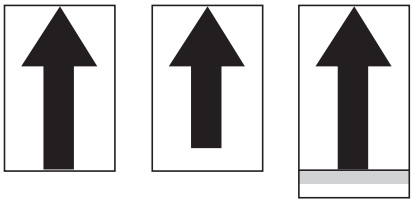

Figure 1-6-62

(12) Adjusting the DP center line

Perform the following adjustment if there is a regular error between the centers of the original and the copy image.

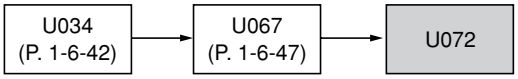

Caution:

Before making the following adjustment, ensure that the above adjustments have been made in maintenance mode.

Procedure

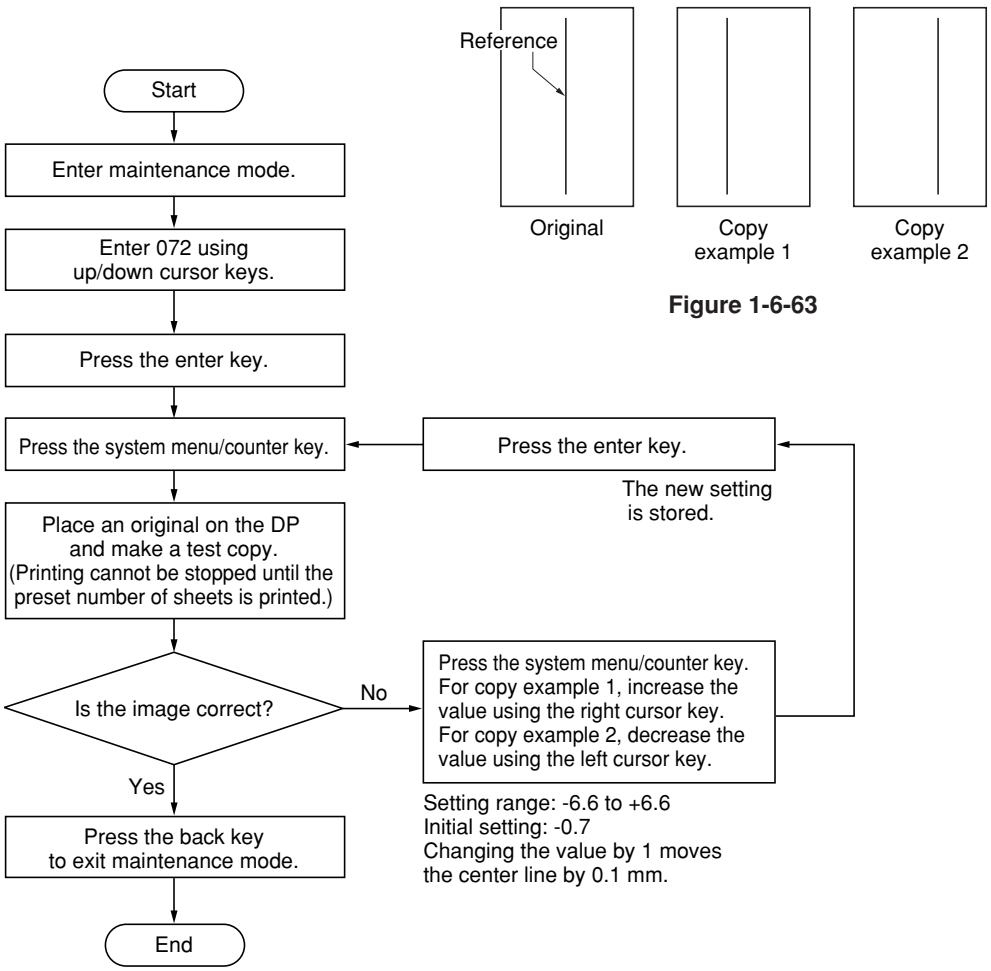

Figure 1-6-63

(13) Adjusting the margins for scanning the original from the DP

Perform the following adjustment if margins are not correct.

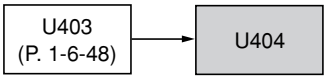

Caution:

Before making the following adjustment, ensure that the above adjustments have been made in maintenance mode.

Procedure

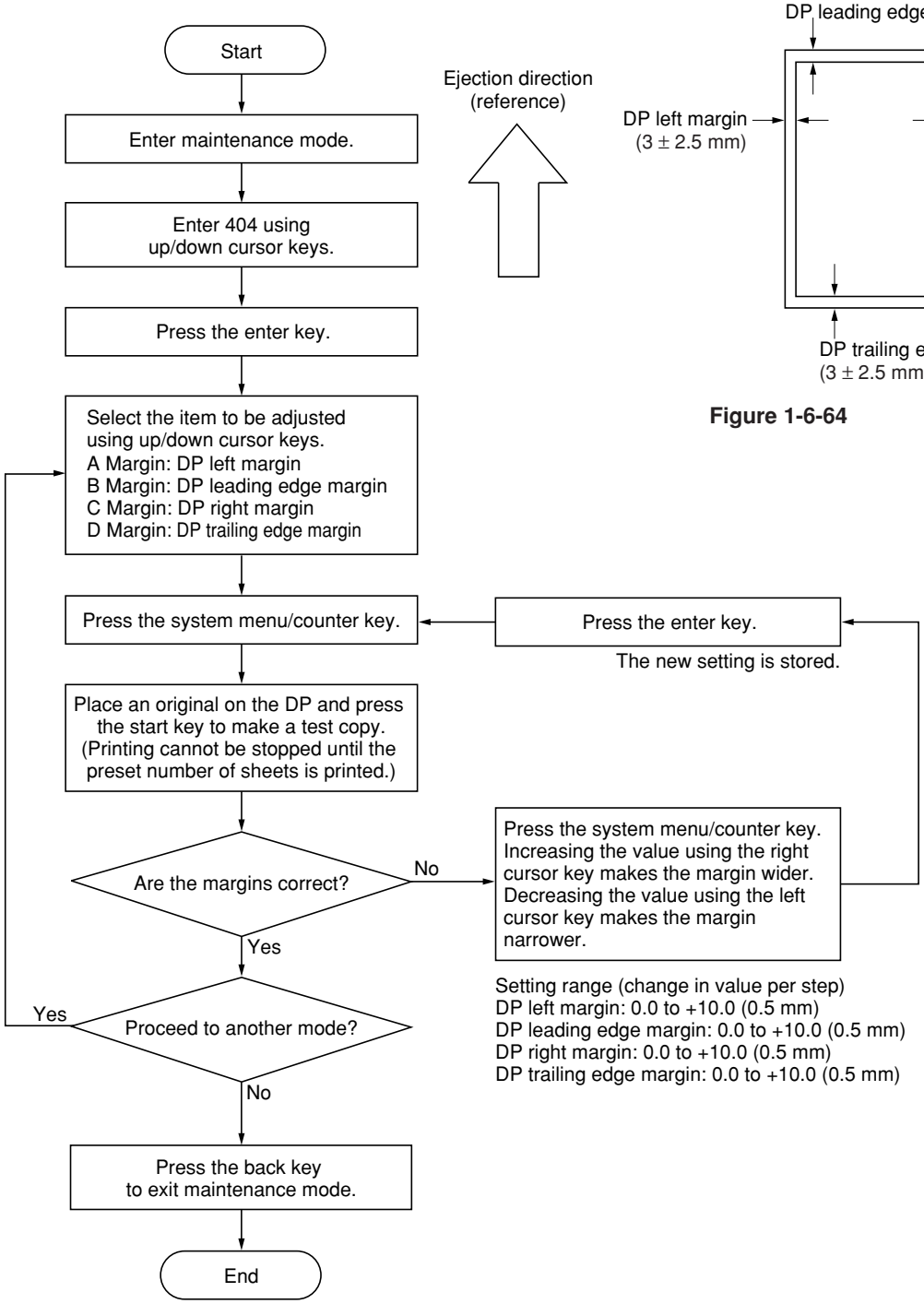

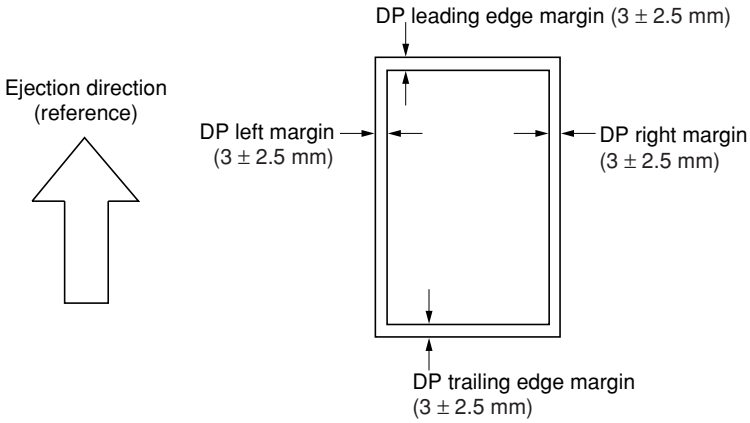

Figure 1-6-64

1-7-1 Upgrading the firmware on the main PWB

• When using Compact Flash

Firmware upgrading requires the following tools:
Compact Flash (Products manufactured by SANDISK are recommended.)

NOTE
• When writing data from a computer to a new Compact Flash, be sure to format it from the computer in advance.
• Since the data is supplied with a compressed file, extract the data and then write it to the Compact Flash.
• Do not write data other than the files below to the Compact Flash.
Folder
NANDinstall: NAND side Install command group
NORinstall: NOR side Install command group
File
VERDEF: Configuration file
ppcboot.bin: Boot program
zImage.kmmfp: Kernel program
initrd.bin: Initialization processing file
rootdiskimage.cramfs: Controller program
setupdiskimage.cramfs: Controller program setting file
• Before upgrading the firmware, make sure to quit the web browser displaying COMMAND CENTER.
• After completing the firmware upgrading, restart the web browser to connect to COMMAND CENTER as necessary.

Procedure
1. Turn the power switch off and disconnect the power plug.
2. Remove the pin and then remove the memory cover.
3. Remove two screws and then remove the CF cover.
4. Insert Compact Flash in a CF slot on the main PWB.
   * Insert it straight all the way into the machine with the front side facing the rear of the machine. If the power switch is turned on when the Compact Flash is not properly inserted, the main PWB may be damaged.
5. Insert the power plug and turn the power switch on.
   * Downloading is displayed on the operation panel and firmware upgrade operation will start (for approximately 2 minutes and 15 seconds).
   Caution:
   Never turn the power switch off during upgrading.
6. Completed is displayed on the operation panel when upgrading is complete.
7. Turn the power switch off and disconnect the power plug.
8. Remove Compact Flash from the main PWB.
9. Refit the CF cover and memory cover.
10. Insert the power plug and turn the power switch on.

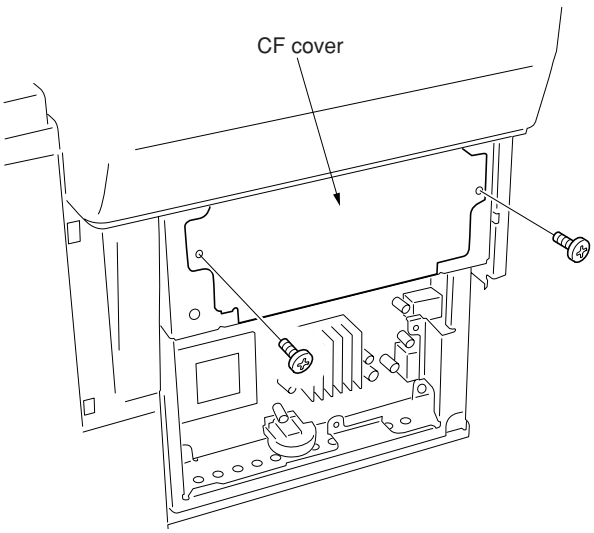

Figure 1-7-1

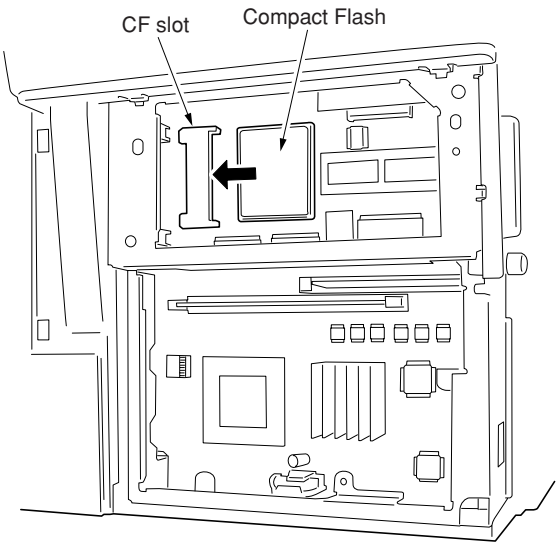

Figure 1-7-2

• When replacing DIMM

Firmware upgrading requires the following tools:
DIMM (P/N 2GM01210/302GM01210)

Procedure

1. Turn the power switch off and disconnect the power plug.
2. Remove the pin and then remove the memory cover.
3. Remove the DIMM from the DIMM slot on the main PWB.
4. Insert the new DIMM into the DIMM slot on the main PWB.
   * Insert the DIMM securely all the way into the slot. If the power switch is turned on when the DIMM is not properly inserted, the main PWB may be damaged.
5. Refit the memory cover.
6. Insert the power plug and turn the power switch on.

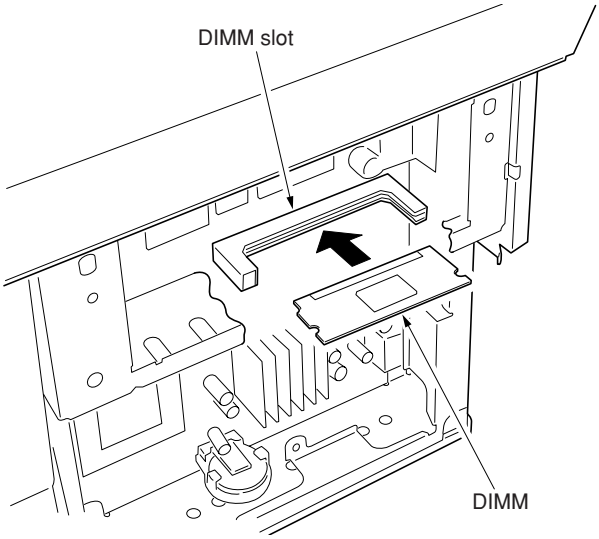

Figure 1-7-3

2-1-1 Paper feeding system

The paper feeding system picks up paper from the cassette, MP tray, or if installed, the optional cassette, feeds it in the machine, and delivers in the output tray. Paper is fed at the precise timing in synchronization with data processing. The paper feeding system finally delivers the printed page to either the face-down or face-up tray as manipulated by the user.

The figure below shows the components in the paper feeding system and the paths through which the paper travels. The sensors, clutches, etc., are described in the following pages.

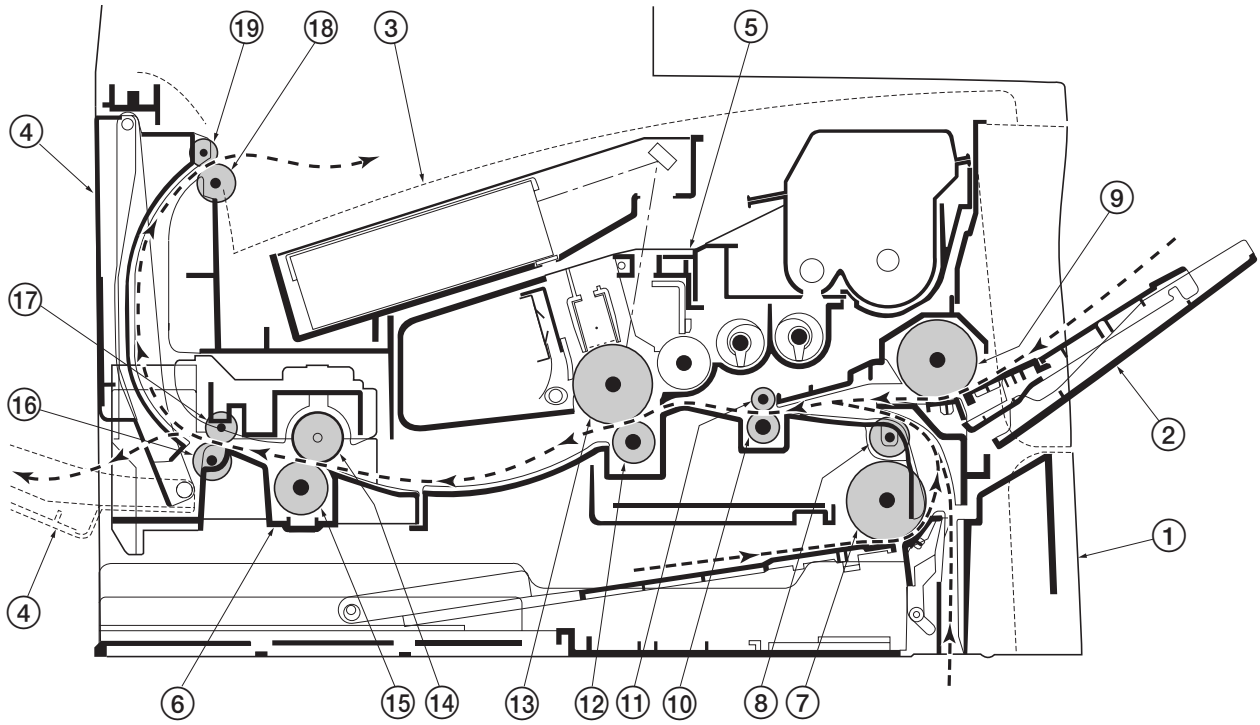

Figure 2-1-1 Paper feeding path

① Cassette
② MP tray
③ Face-down output tray
④ Face-up output tray
⑤ Process unit
⑥ Fuser unit
⑦ Feed roller
⑧ Feed pulley
⑨ MP feed roller
⑩ Lower registration roller
⑪ Upper registration roller
⑫ Transfer roller
⑬ Drum
⑭ Heat roller
⑮ Press roller
⑯ Lower exit roller
⑰ Exit pulley
⑱ Upper exit roller
⑲ Exit pulley

(1) Paper feed control

The following diagram shows interconnectivity of the feeding system components including the sensors and rollers. The engine PWB provides the signals in conjunction with the electrophotography process that is driven by the main PWB.

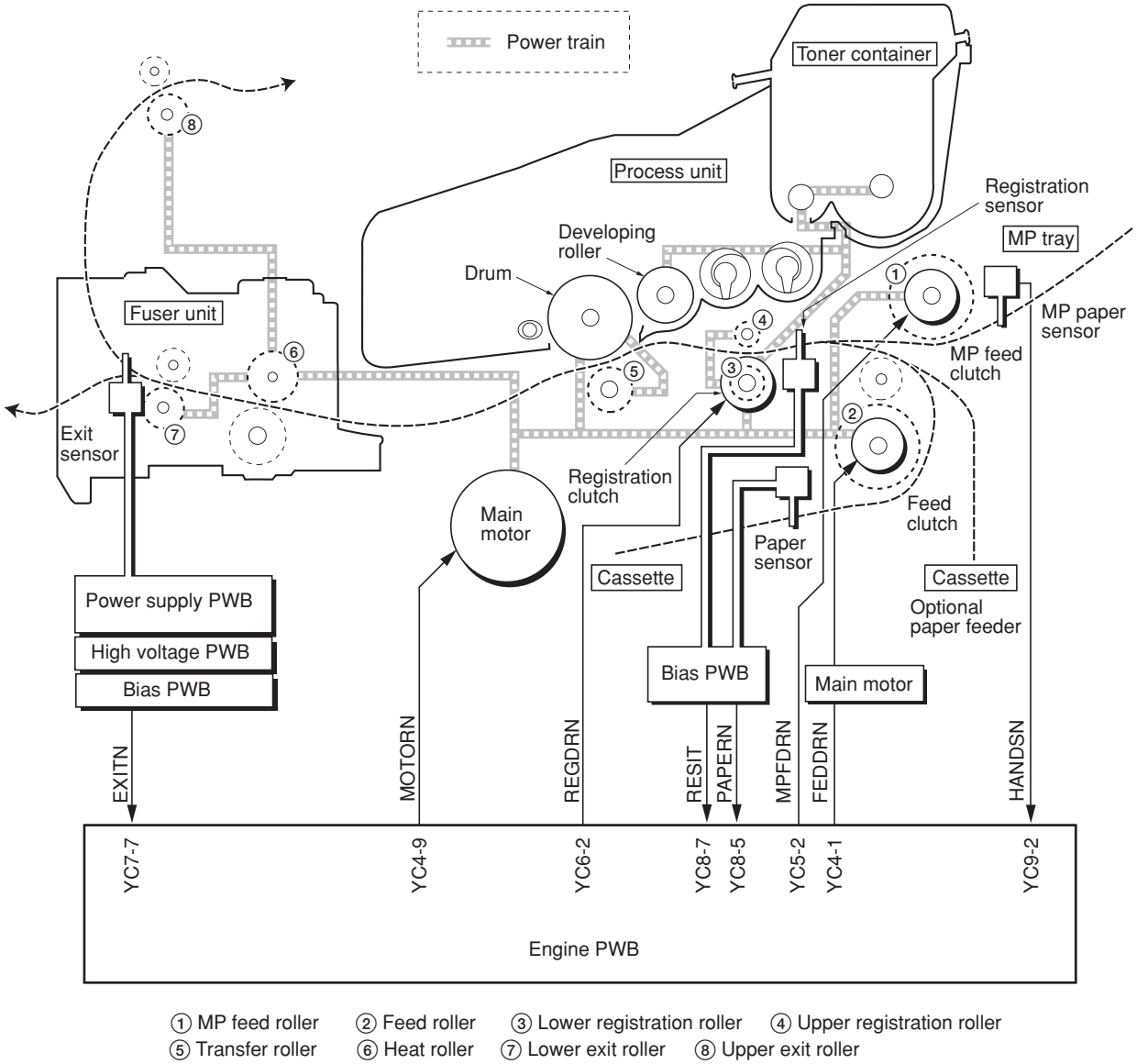

① MP feed roller ② Feed roller ③ Lower registration roller ④ Upper registration roller
⑤ Transfer roller ⑥ Heat roller ⑦ Lower exit roller ⑧ Upper exit roller

Figure 2-1-2 Paper feed control

(2) Paper feeding mechanism

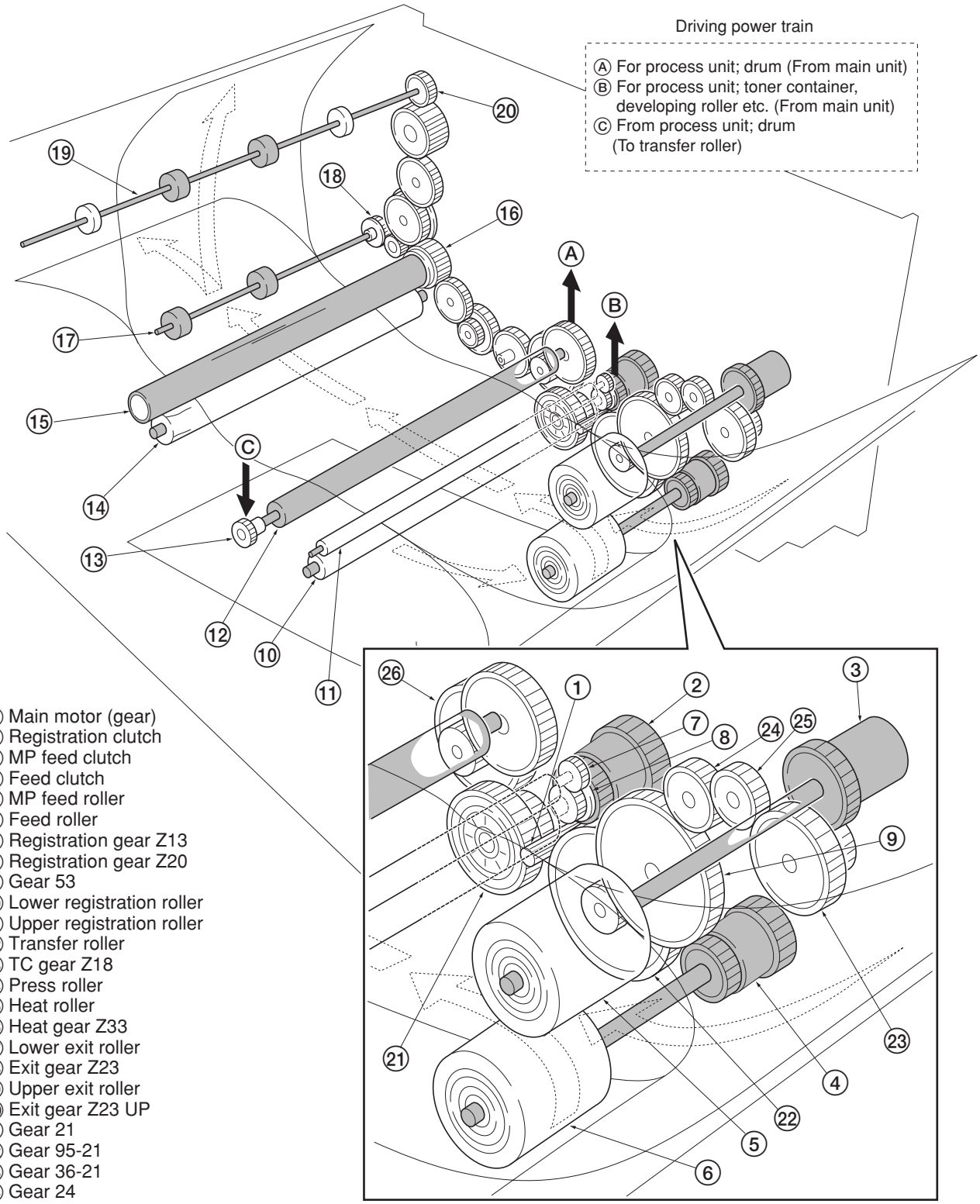

① Main motor (gear)
② Registration clutch
③ MP feed clutch
④ Feed clutch
⑤ MP feed roller
⑥ Feed roller
⑦ Registration gear Z13
⑧ Registration gear Z20
⑨ Gear 53
⑩ Lower registration roller
⑪ Upper registration roller
⑫ Transfer roller
⑬ TC gear Z18
⑭ Press roller
⑮ Heat roller
⑯ Heat gear Z33
⑰ Lower exit roller
⑱ Exit gear Z23
⑲ Upper exit roller
⑳ Exit gear Z23 UP
㉑ Gear 21
㉒ Gear 95-21
㉓ Gear 36-21
㉔ Gear 24
㉕ Gear 21
㉖ Gear 48-21

Figure 2-1-3 Paper feeding mechanism

2-1-2 Original scanning system

The scanner unit consists of the image scanning unit (ISU) for main-direction scanning, and drive part for traveling the ISU unit to sub-direction.

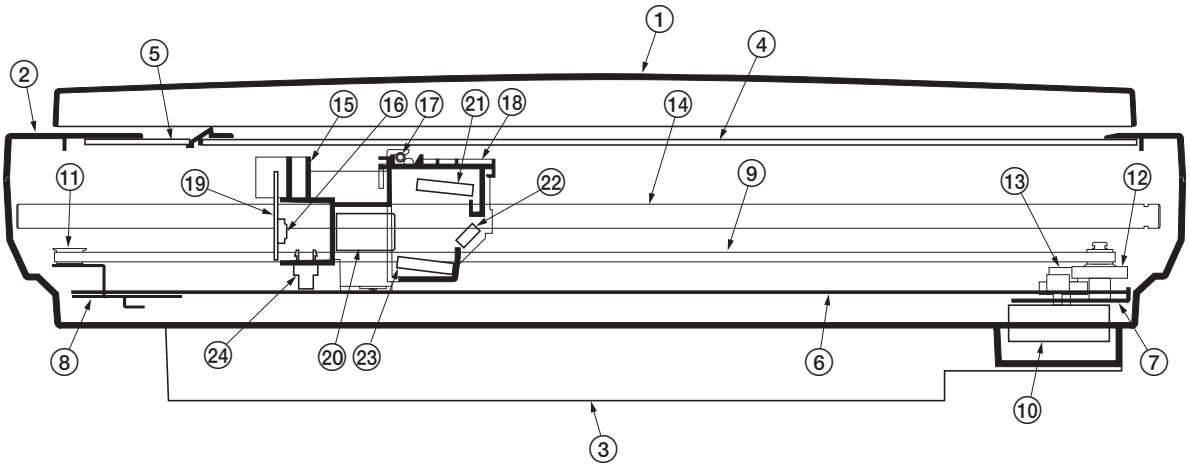

Figure 2-1-4 Scanner unit

① Original holder
② Scanner upper frame
③ Scanner lower frame
④ Contact glass
⑤ DP Contact glass
⑥ Scanner rail
⑦ Scanner motor mount
⑧ Tension pulley mount
⑨ Scanner belt
⑩ Scanner motor
⑪ Tension pulley
⑫ Scanner gear 45/18
⑬ Scanner gear 39/22
⑭ Scanner shaft
⑮ ISU housing
⑯ CCD image sensor
⑰ Exposure lamp
⑱ Exposure lamp mount
⑲ CCD PWB
⑳ ISU lens
㉑ Mirror A
㉒ Mirror B
㉓ Mirror A
㉔ Scanner home position sensor

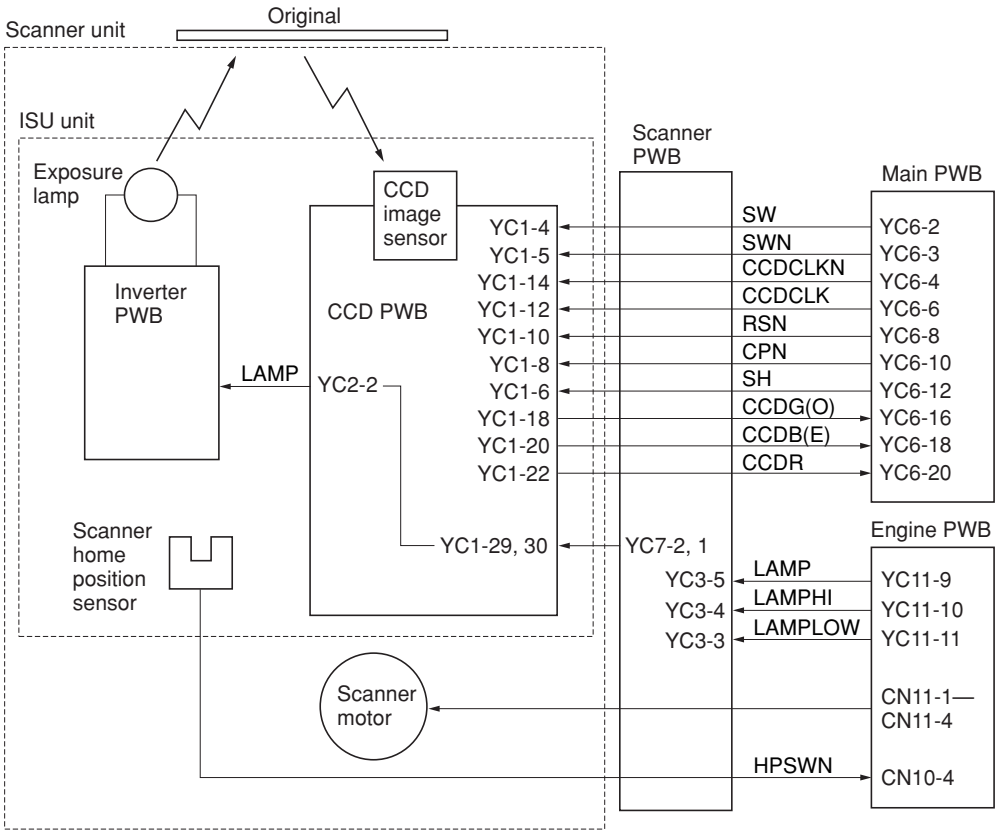

Figure 2-1-5 Scanner control circuit block diagram

(1) ISU unit

The ISU unit consists of an exposure lamp, three mirrors, an ISU lens, a CCD PWB, and so on. Also an inverter PWB for driving the exposure lamp and a scanner home position sensor for detecting the home position of the ISU unit are incorporated.

The original on the contact glass is exposed to the light of the exposure lamp that is reflected by the reflector. The image is input through reflection by the three mirrors and through the ISU lens to the CCD image sensor on the CCD PWB. The CCD image sensor scans one row of the image in the main scan direction, converts it to electric signals, and outputs them to the main PWB. Then the ISU unit is moved in the sub scan direction along the scanner shaft, and the CCD image sensor scans the next row of the image in the main scan direction. The operation described above is repeated for scanning the overall image of the original. If an optional DP is used, the ISU unit stops at the position of the DP contact glass and scans sequentially one row of the image on the original in synchronization with the moving timing of the original in the sub scan direction by driving the DP.

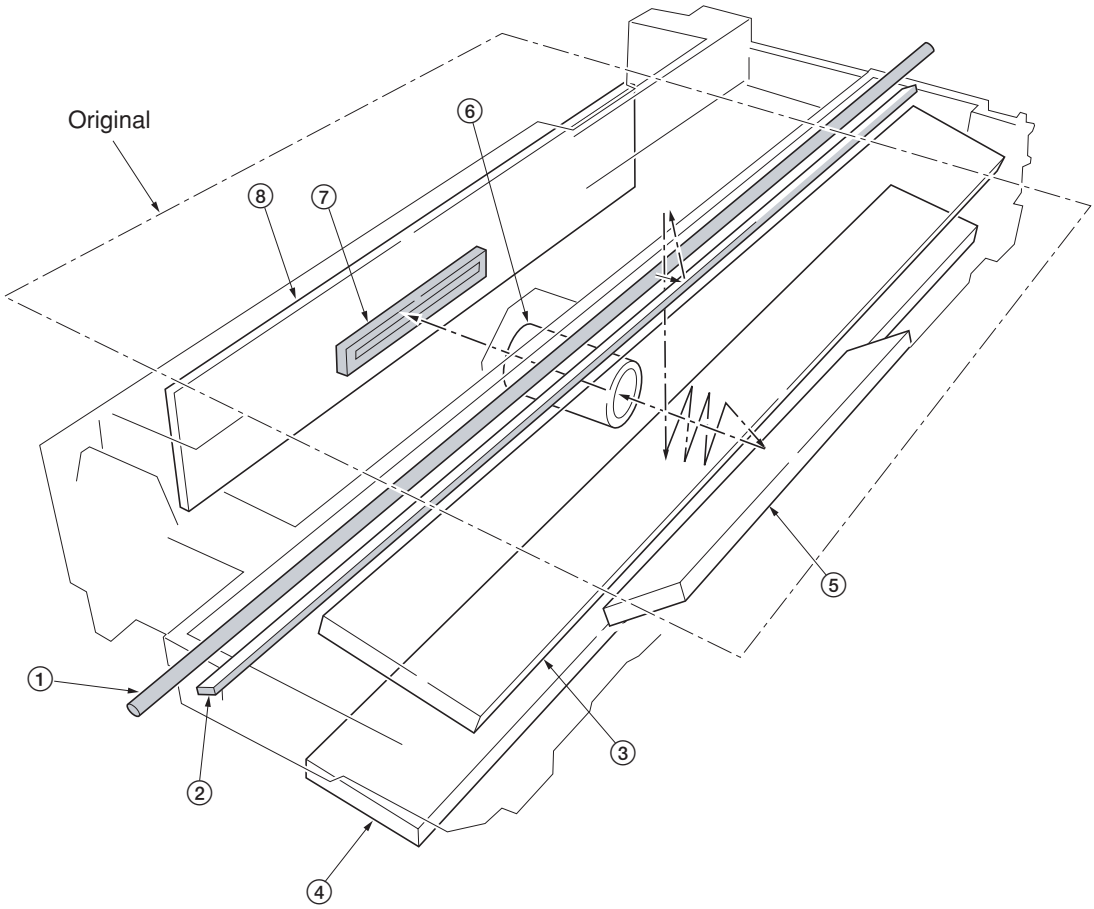

Figure 2-1-6 ISU unit

① Exposure lamp
② Scanner reflector
③ Mirror A
④ Mirror A
⑤ Mirror B
⑥ ISU lens
⑦ CCD image sensor
⑧ CCD PWB

2-1-3 Electrophotographic system

Electrophotography is the technology used in laser printing which transfer data representing texts or graphics objects into a visible image which is developed on the photosensitive drum, finally fusing on paper, using light beam generated by a laser diode.

This section provides technical details on the machine's electrophotography system.

(1) Electrophotographic cycle
The electrophotography system of the machine performs a cyclic action made of six steps as follows. Each step is technically explained in the following sections.

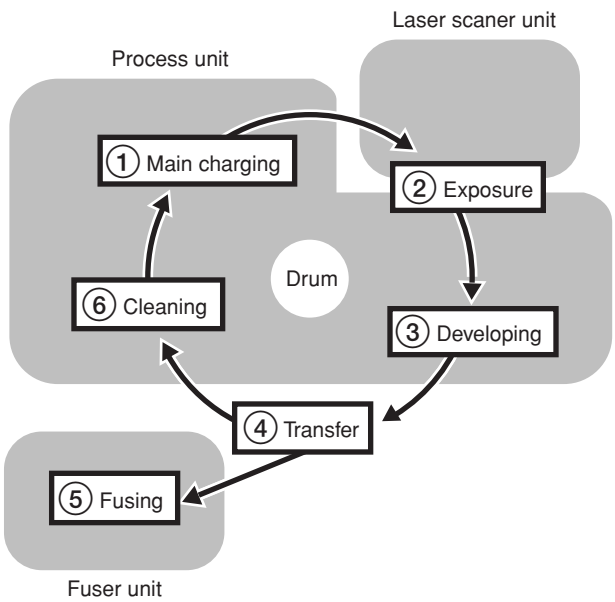

Figure 2-1-7 Electrophotographic cycle

The sections for main charging, exposure (drum), developing, and cleaning are modularized in one Process unit.

(1-1) Process unit mechanism

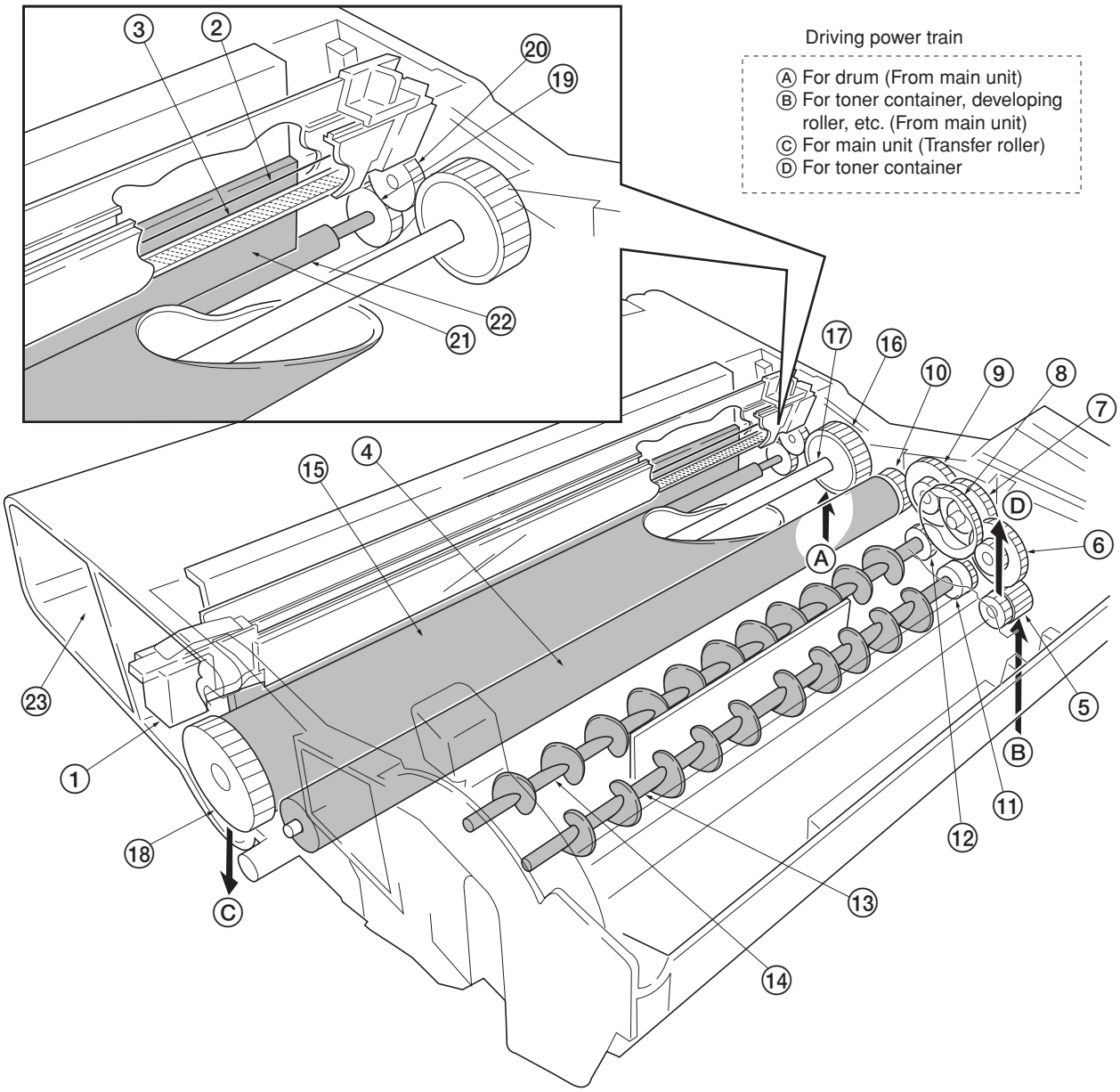

Figure 2-1-8 Process unit mechanism

① Main charger unit
② Charger wire
③ Grid
④ Developing roller
⑤ Gear Z14-Z18
⑥ Gear Z14-Z36
⑦ Gear Z18-Z36
⑧ Free gear Z40
⑨ Gear Z18-Z35H
⑩ MAG gear Z24H
⑪ Mixer gear Z20 B
⑫ Mixer gear Z20 A
⑬ DLP screw B
⑭ DLP screw A
⑮ Drum
⑯ Drum gear Z35H
⑰ Drum shaft
⑱ Drum gear Z36
⑲ Sweep gear Z13
⑳ Idle gear 18H
㉑ Cleaning blade
㉒ Sweep roller
㉓ Waste toner reservoir

(2) Main charging

(2-1) Photo conductive drum

The durable layer of organic photoconductor (OPC) is coated over the aluminum cylinder base. The OPC tend to reduce its own electrical conductance when exposed to light. After a cyclic process of charging, exposure, and development, the electrostatic image is constituted over the OPC layer.

Since the OPC is materialized by resin, it is susceptible to damage caused by sharp edges such as a screwdriver, etc., resulting in a print quality problem. Also, finger prints can cause deterioration of the OPC layer, therefore, the drum (in the process unit) must be handled with care. Substances like water, alcohol, organic solvent, etc., should be strictly avoided.

As with all other OPC drums, the exposure to a strong light source for a prolonged period can cause a print quality problem. The limit is approximately 500 lux for less than five minutes. If the drum (process unit) remains removed form the machine, it should be stored in a cool, dark place.

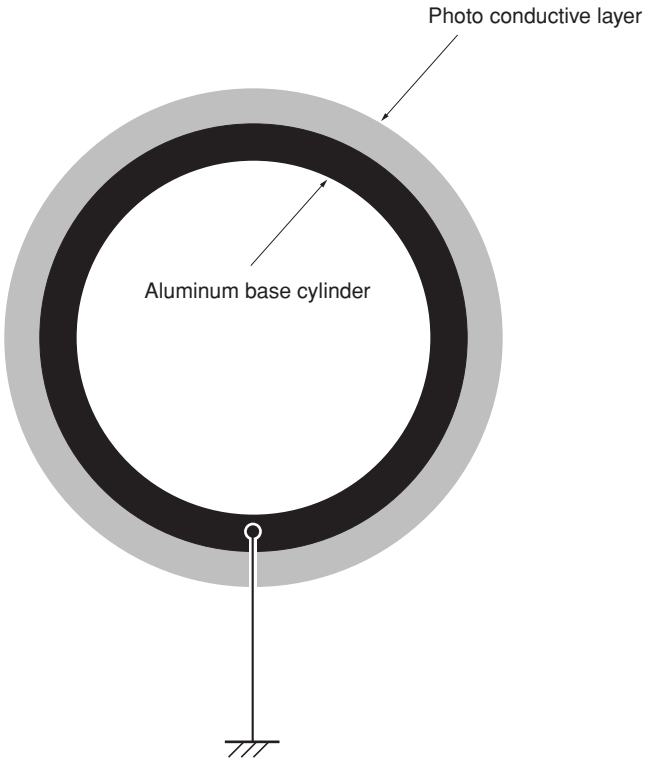

Figure 2-1-9 Photo conductive drum

(2-2) Charging the drum
The following shows a simplified diagram of the electrophotographic components in relation to the engine system. Charging the drum is done by the main charger unit.

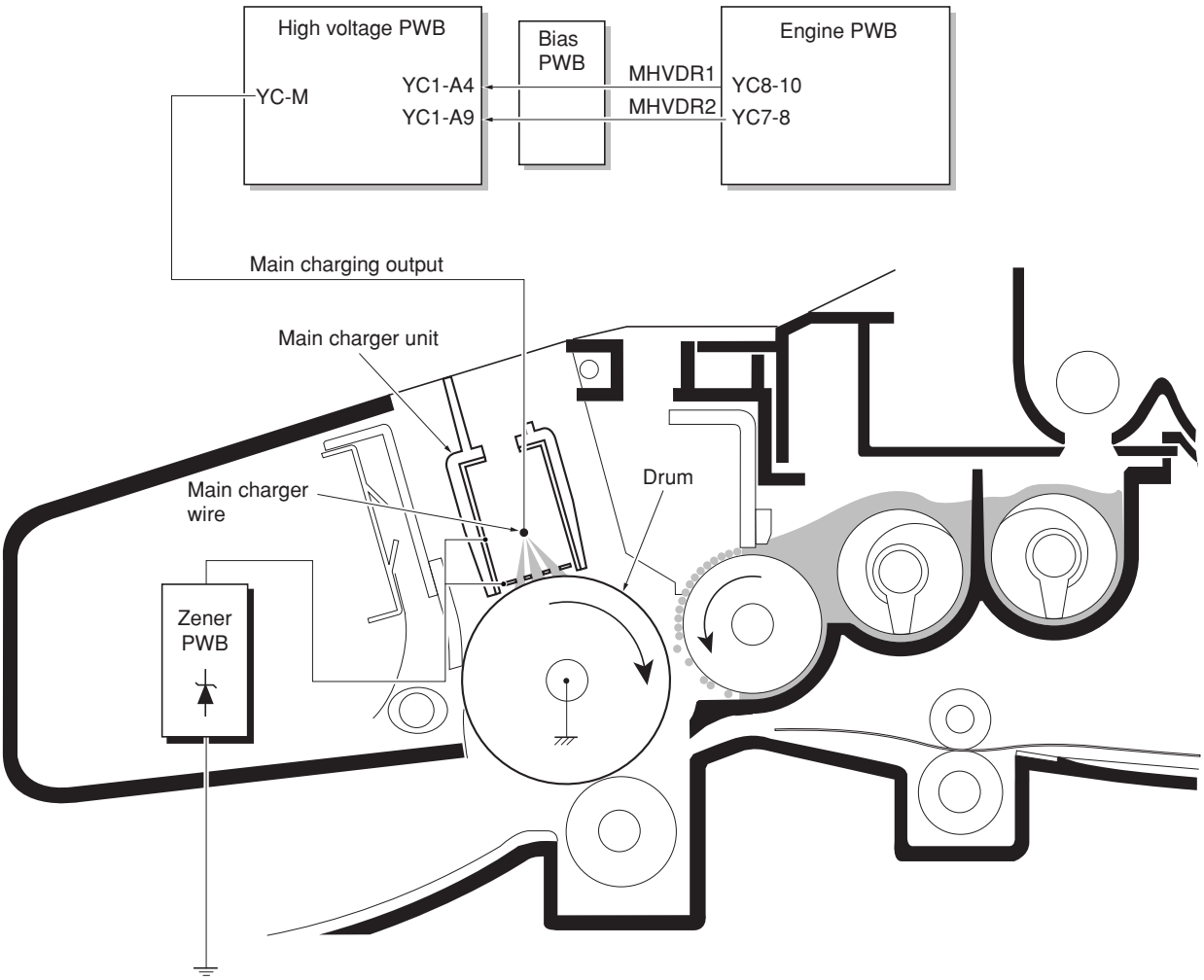

Figure 2-1-10 Charging the drum

As the drum rotates in a clean (neutral) state, its photoconductive layer is given a uniform, positive (+) corona charge dispersed by the main charger wire.

Due to high-voltage scorotron charging, the charging wire can get contaminated by oxidization after a long run. Therefore, it must be cleaned periodically from time to time. Cleaning the charging wire prevents print quality problems such as black streaks.

(3) Exposure
The charged surface of the drum is then scanned by the laser beam from the laser scanner unit.

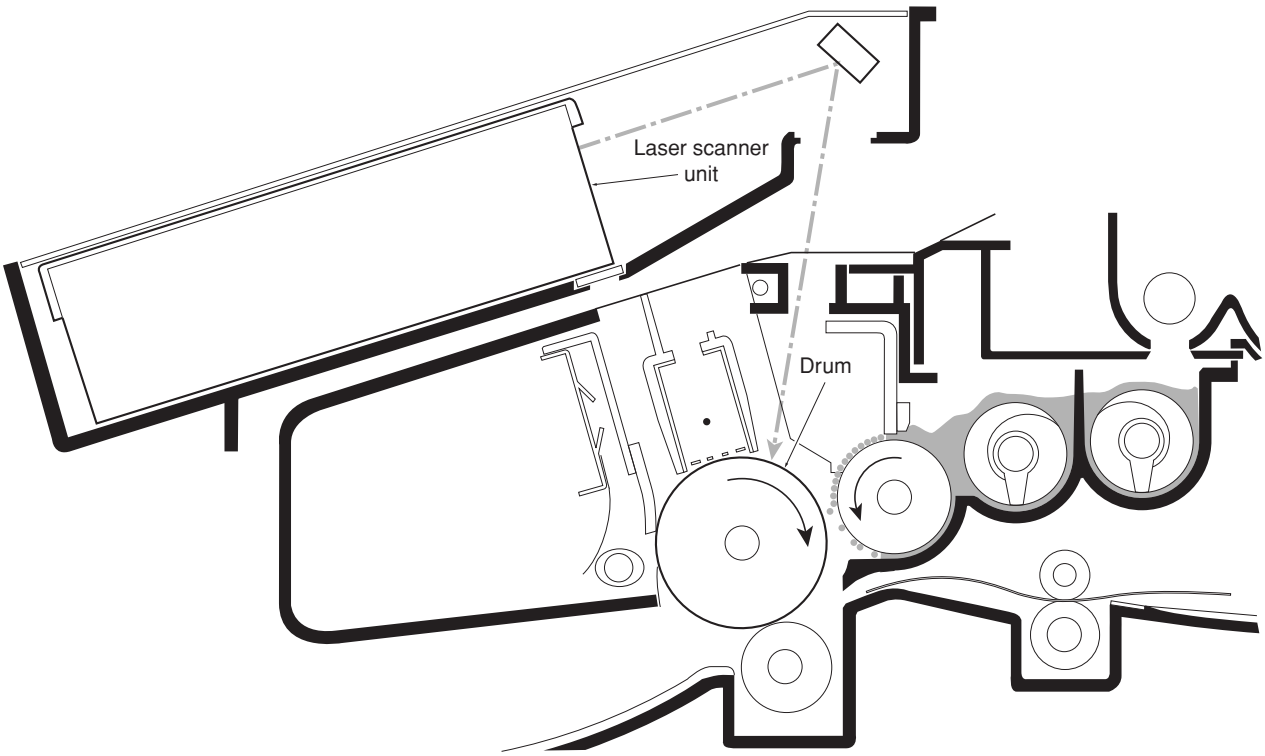

Figure 2-1-11 Exposure

The laser beam (780 nm wavelength) beam is dispersed as the polygon motor (polygon mirrors) revolves to reflect the laser beam over the drum. Various lenses and mirror are housed in the scanner unit, adjust the diameter of the laser beam, and focalize it at the drum surface.

(3-1) Laser scanner unit

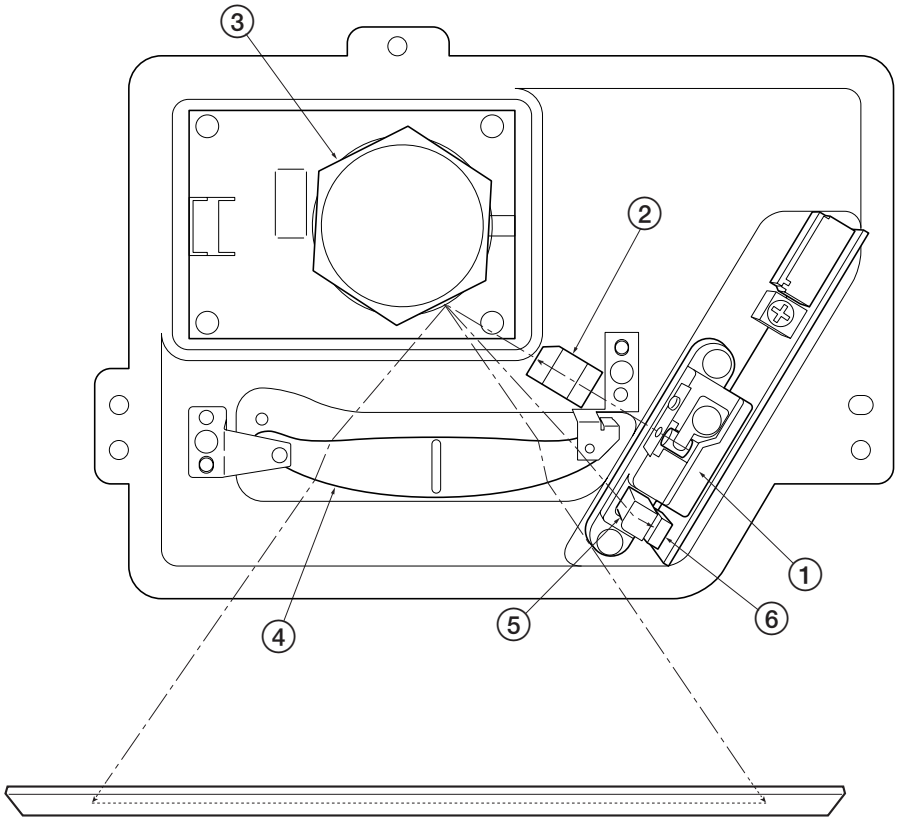

Figure 2-1-12 Laser scanner unit

① Laser diode ..... Emits diffused, visible laser.
② Cylindrical lens ..... Compensates the vertical angle at which the laser beam hits a polygon mirror segment.
③ Polygon mirror (motor) ..... Has six mirror segments around its hexagonal circumference; each mirror corresponding to one scanned line width on the drum when laser beam scans on it.
④ F-theta lens ..... The f-theta lens equalizes focusing distortion on the far ends of the drum.
⑤ Sensor mirror ..... Bends the very first shot of a laser scan towards the beam detection sensor (⑥).
⑥ Pin photo sensor ..... When shone by the sensor mirror above, this photo-sensor generates a trigger signal for the engine controller to start activating the paper feeding system.

(3-2) Drum surface potential

The laser beam is continually switched on and off depending on the print data. It is on for a black (exposed) dot and off for a white (blank) dot. Since the drum surface is evenly charged, whenever it is illuminated by the laser beam, the electrical resistance of the photoconductor is reduced and the potential on the photoconductor is also lowered. Resulted on the drum surface is an electrostatic image which represents the data to print. Note that the area to be printed black has the low potential, constituting a positively exposed image.

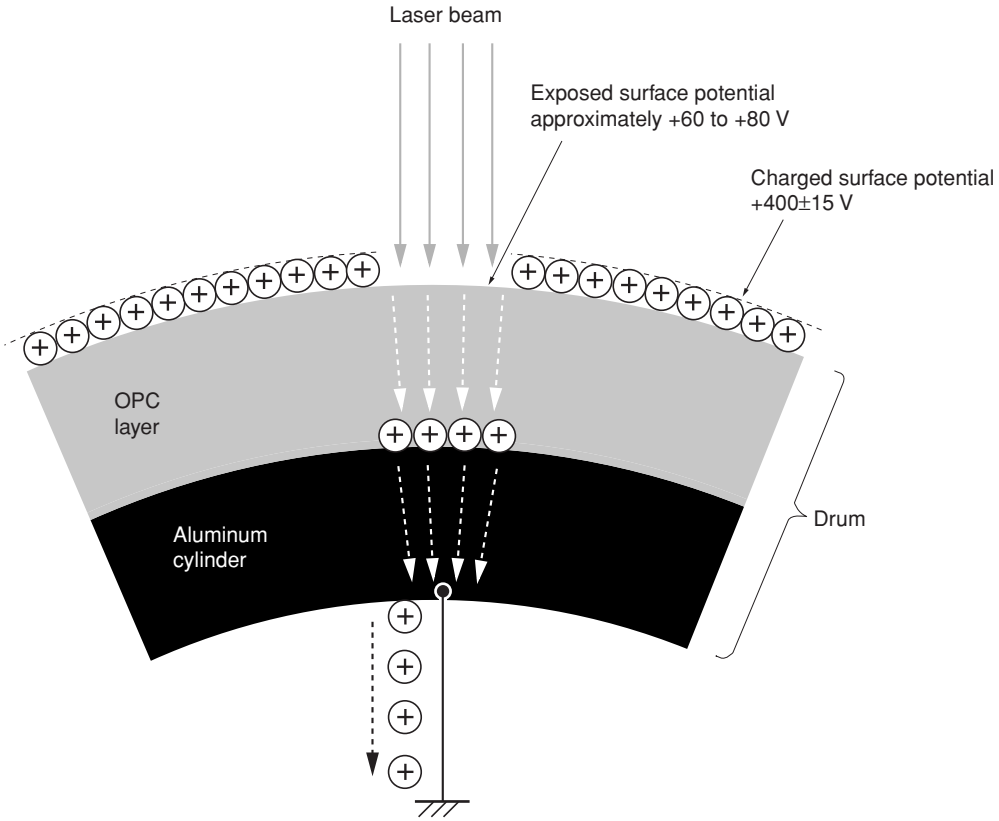

Figure 2-1-13 Drum surface potential

(4) Development

The latent image constituted on the drum is developed into a visible image. The developing roller contains a 3-pole (S-N-S) magnet core and an aluminum cylinder rotating around the magnet core. Toner attracts to the developing roller since it is powdery ink made of black resin bound to iron particles. Doctor blade, magnetized by magnet, is positioned approximately 0.3 mm above the developing roller to constitute a smooth layer of toner in accordance with the roller revolution.

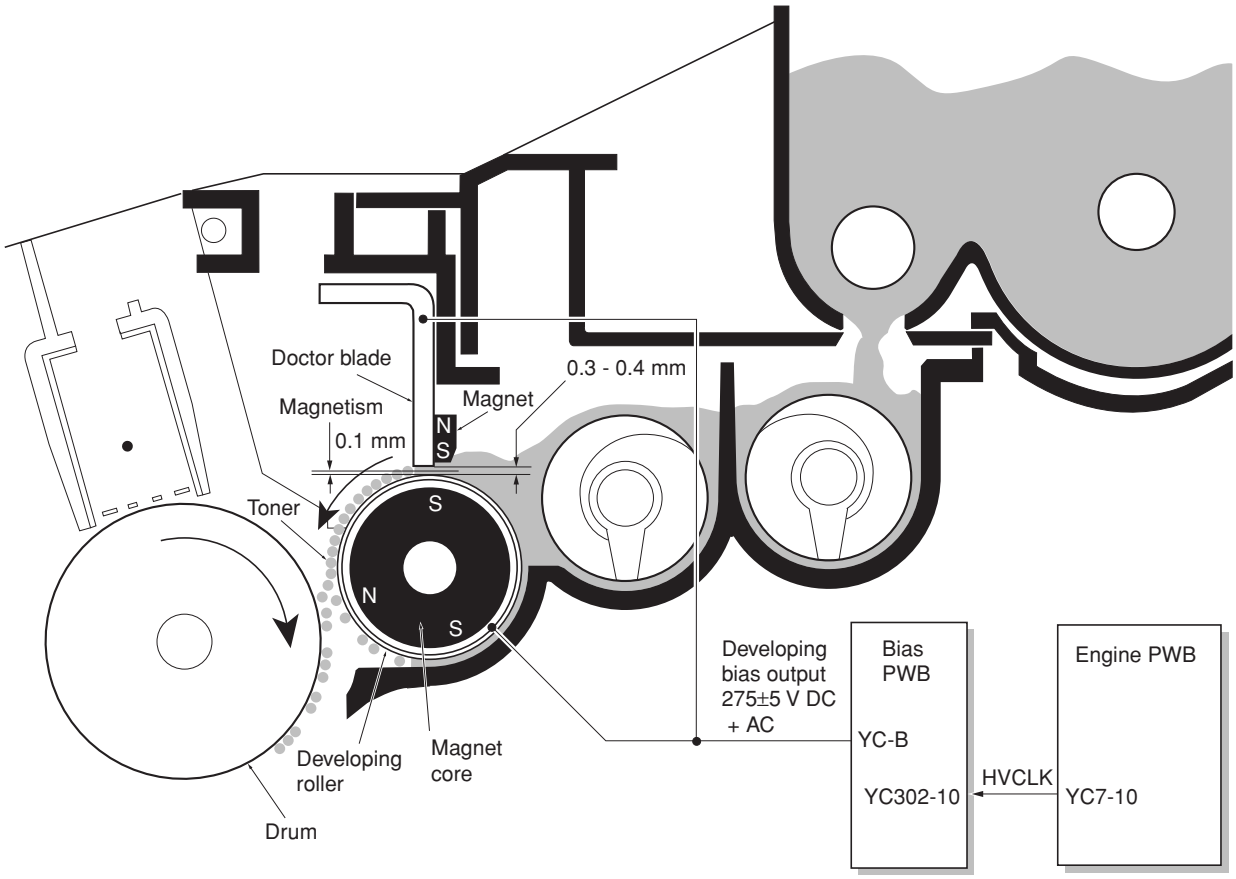

Figure 2-1-14 Development

The developing roller is applied with the AC-weighted, positive DC power source. Toner on the developing roller is given a positive charge. The positively charged toner is then attracted to the areas of the drum which was exposed to the laser light. (The gap between the drum and the developing roller is approximately 0.3 mm.) The non-exposed areas of the drum repel the positively charged toner as these areas maintain the positive charge.
The developing roller is also AC-biased to ensure contrast in yielding by compensating the toner's attraction and repelling action during development.

(5) Transfer

The image developed by toner on the drum is transferred onto the paper because of the electrical attraction between the toner itself and the transfer roller. The transfer roller is negatively biased so that the positively charged toner is attracted onto the paper while it is pinched by the drum and the transfer roller.

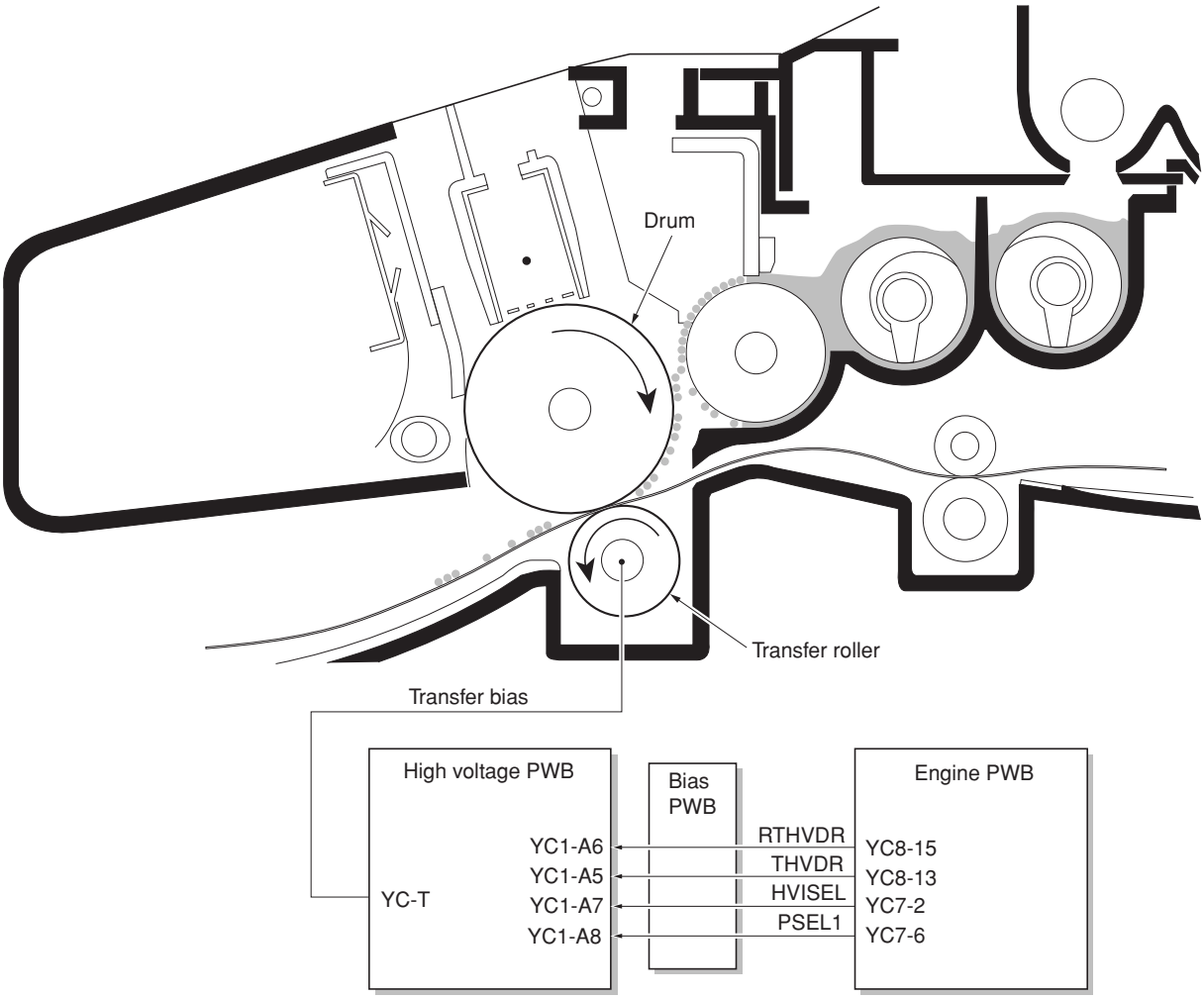

Figure 2-1-15 Transfer

The nominal transfer bias is set to approximately -1.8 kV (limit) with the -6 mA current. Since the ideal potential of the transfer bias depends on the thickness of paper, the bias is raised to approximately -2.5 kV/-6 mA for thicker paper. On the other hand, the bias current is reduced to -1.8 kV/-6 mA for thin paper.

(6) Fusing

The toner on the paper is molten and pressed into the paper as it passes between the heat roller and the press roller in the fuser unit.

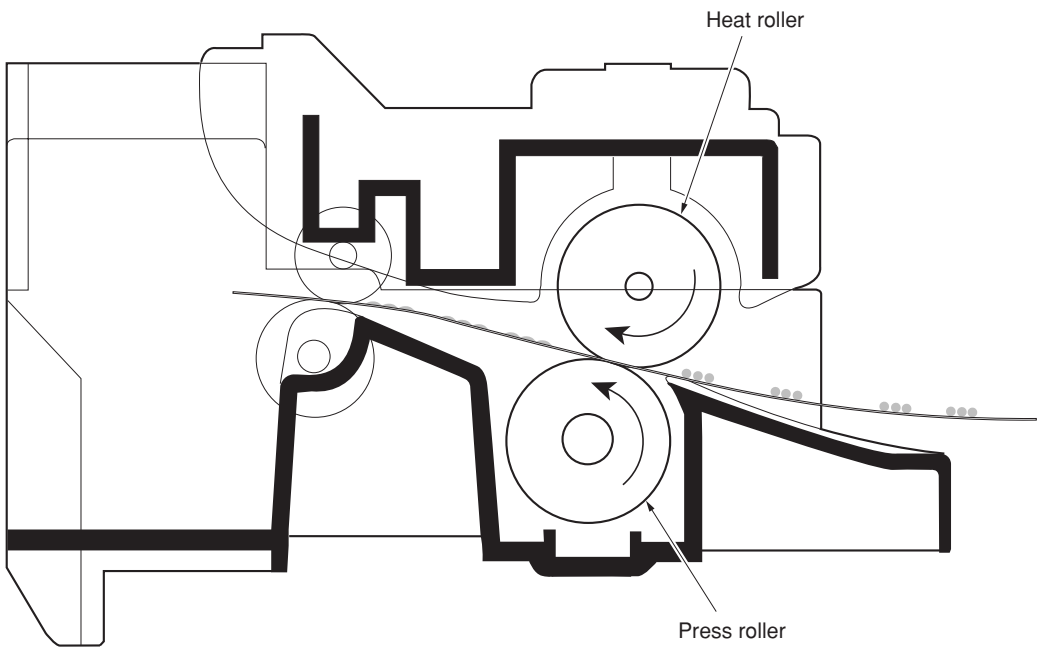

Figure 2-1-16 Fusing

The heat roller has a halogen lamp inside which continuously turns on and off by the thermistor to maintain the constant temperature onto the heat roller surface.
The heat roller is resin coated by florin to prevent toner from accumulating on the roller after a long run. Care must be taken while handling the heat roller not to scratch the roller surface as doing so may result in print problems.
The heat roller has four claws which are continuously in contact with its surface. These claws prevent the paper on which toner has been fused from being wound around the heat roller causing paper jam.

The pressure roller is made of the heat-resistant silicon rubber. This roller is used to strongly press the paper towards the heat roller by means of coil springs.
The temperature of the heat roller is constantly monitored by the engine PWB using the thermistor and triac. Should the temperature of the heat roller exceed the predetermined value, the thermal cutout is activated to effectively disconnect the heater (halogen) lamp from power.

(6-1) Fuser unit mechanism

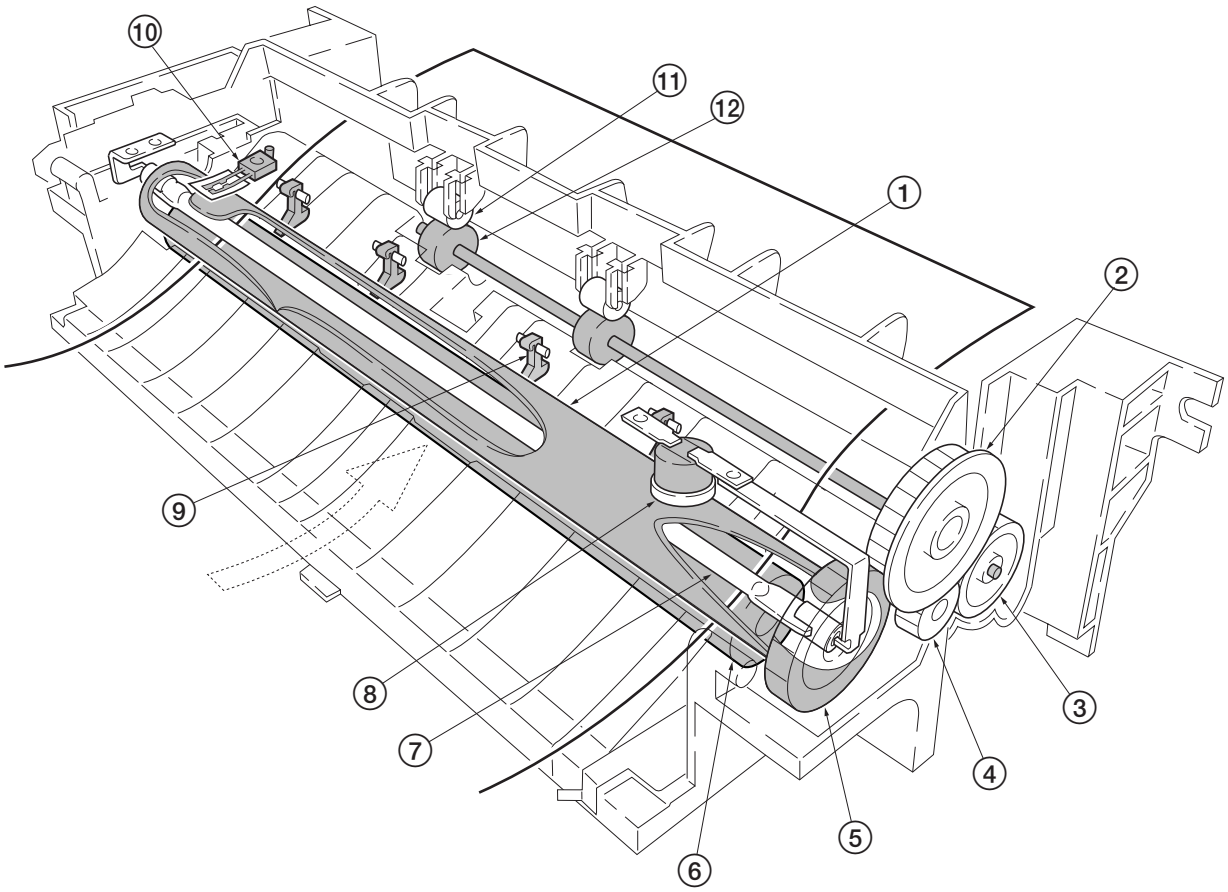

Figure 2-1-17 Fuser unit mechanism

① Heat roller
② Idle gear Z34
③ Exit gear Z23
④ Idle gear Z18
⑤ Heat gear Z33
⑥ Press roller
⑦ Heater lamp
⑧ Thermal cutout
⑨ Separator(s)
⑩ Thermistor
⑪ Exit pulley(s)
⑫ Lower exit roller

(7) Cleaning

After the transferring process, the drum needs to be physically cleaned of toner which is residual after the development process. The cleaning blade is constantly pressed against the drum and scrapes the residual toner off to the sweep roller. The waste toner is collected at the output end of the sweep roller and sent back to the toner container, into the waste toner reservoir.

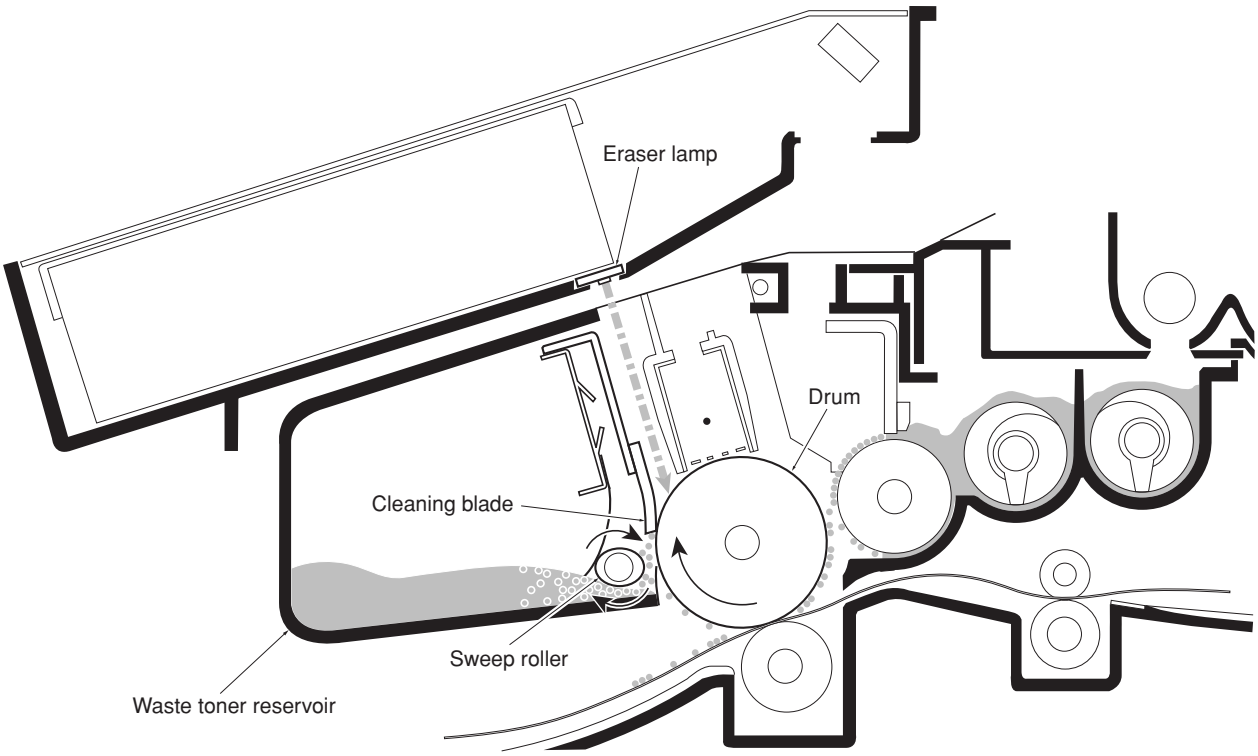

Figure 2-1-18 Drum cleaning and erasing static charge

After the drum is physically cleaned, it then must be cleaned to the electrically neutral state. This is necessary to erase any residual positive charge, ready to accept the uniform charge for the next print process. The residual charge is canceled by exposing the drum to the light emitted from the eraser lamp. This lowers the electrical conductivity of the drum surface making the residual charge on the drum surface escape to the ground.

2-2-1 Electrical parts layout

(1) Main unit

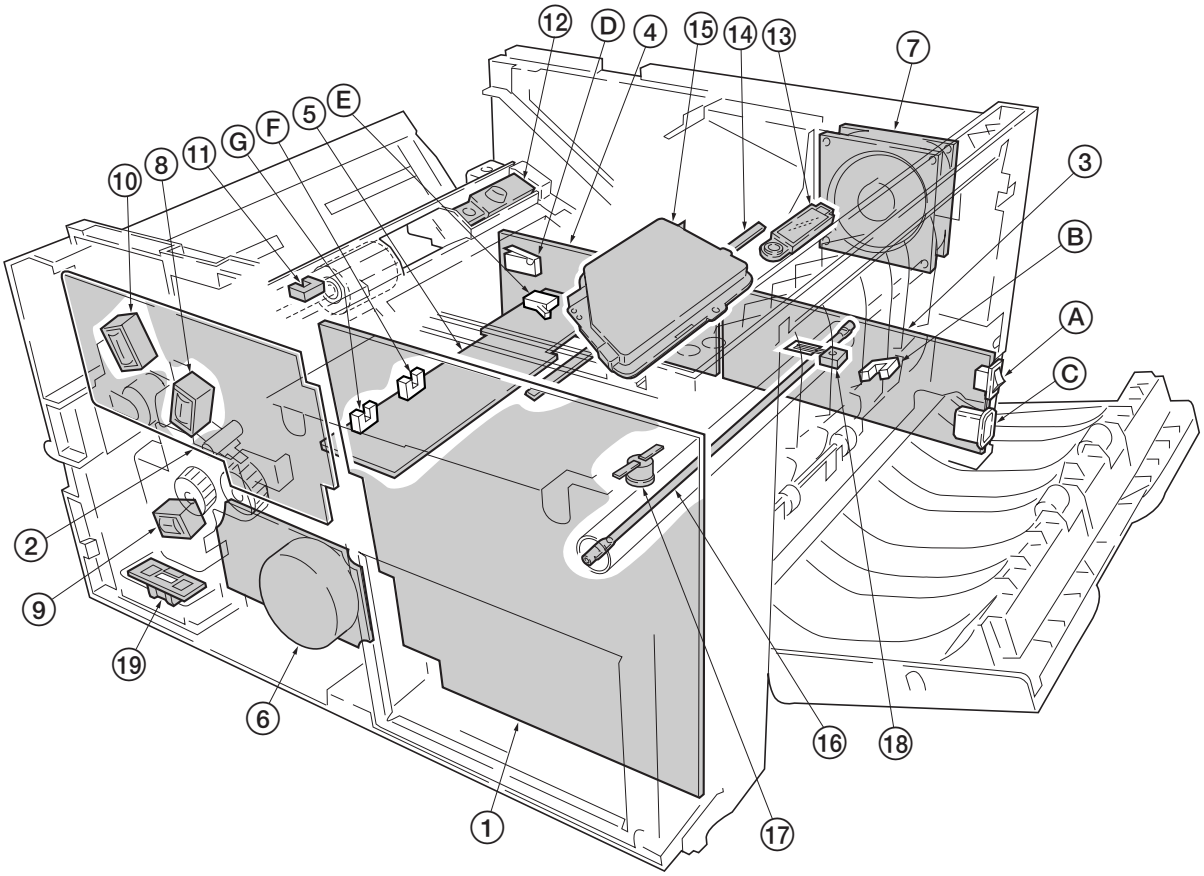

Figure 2-2-1 Main unit

① Main PWB
② Engine PWB
③ Power supply PWB
  Ⓐ Power switch
  Ⓑ Exit sensor
  Ⓒ AC Inlet
④ High voltage PWB
  Ⓓ Interlock switch
⑤ Bias PWB
  Ⓔ Cassette switch
  Ⓕ Registration sensor
  Ⓖ Paper sensor
⑥ Main motor
⑦ Cooling fan
⑧ Registration clutch
⑨ Feed clutch
⑩ MP feed clutch
⑪ MP paper sensor
⑫ Toner sensor [PWB]
⑬ Waste toner sensor [PWB]
⑭ Eraser lamp [PWB]
⑮ Laser scanner unit
⑯ Heater lamp
⑰ Thermal cutout
⑱ Thermistor
⑲ Paper feeder interface connector

(2) Scanner unit

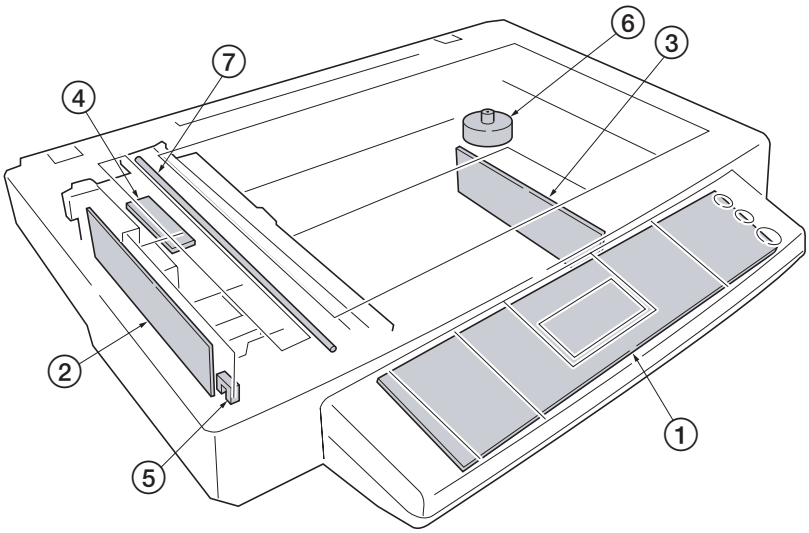

Figure 2-2-2 Scanner unit

① Operation PWB
② CCD PWB
③ Scanner PWB
④ Inverter PWB
⑤ Scanner home position sensor
⑥ Scanner motor
⑦ Exposure lamp

2-3-1 Main PWB

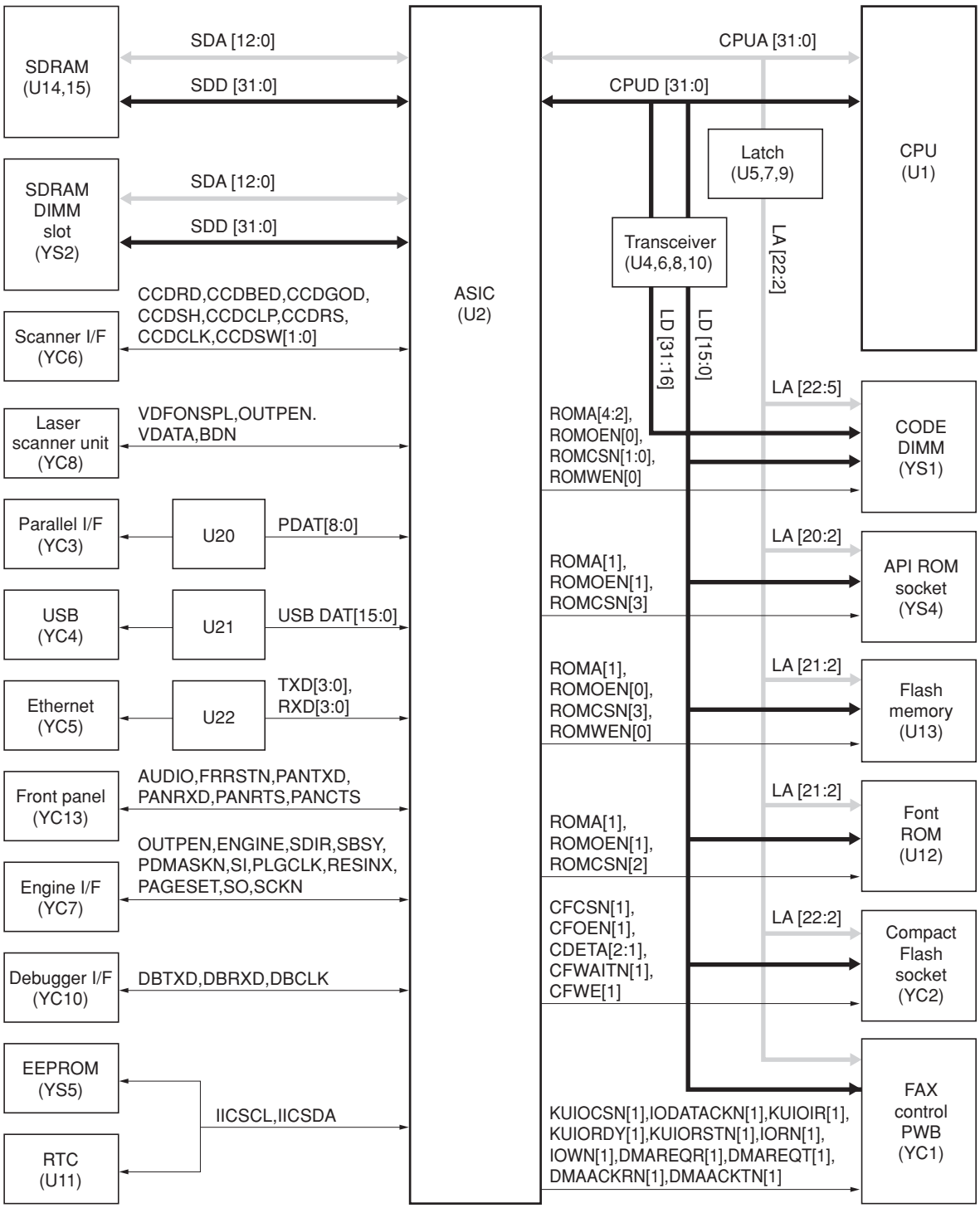

Figure 2-3-1 Main PWB circuit block diagram

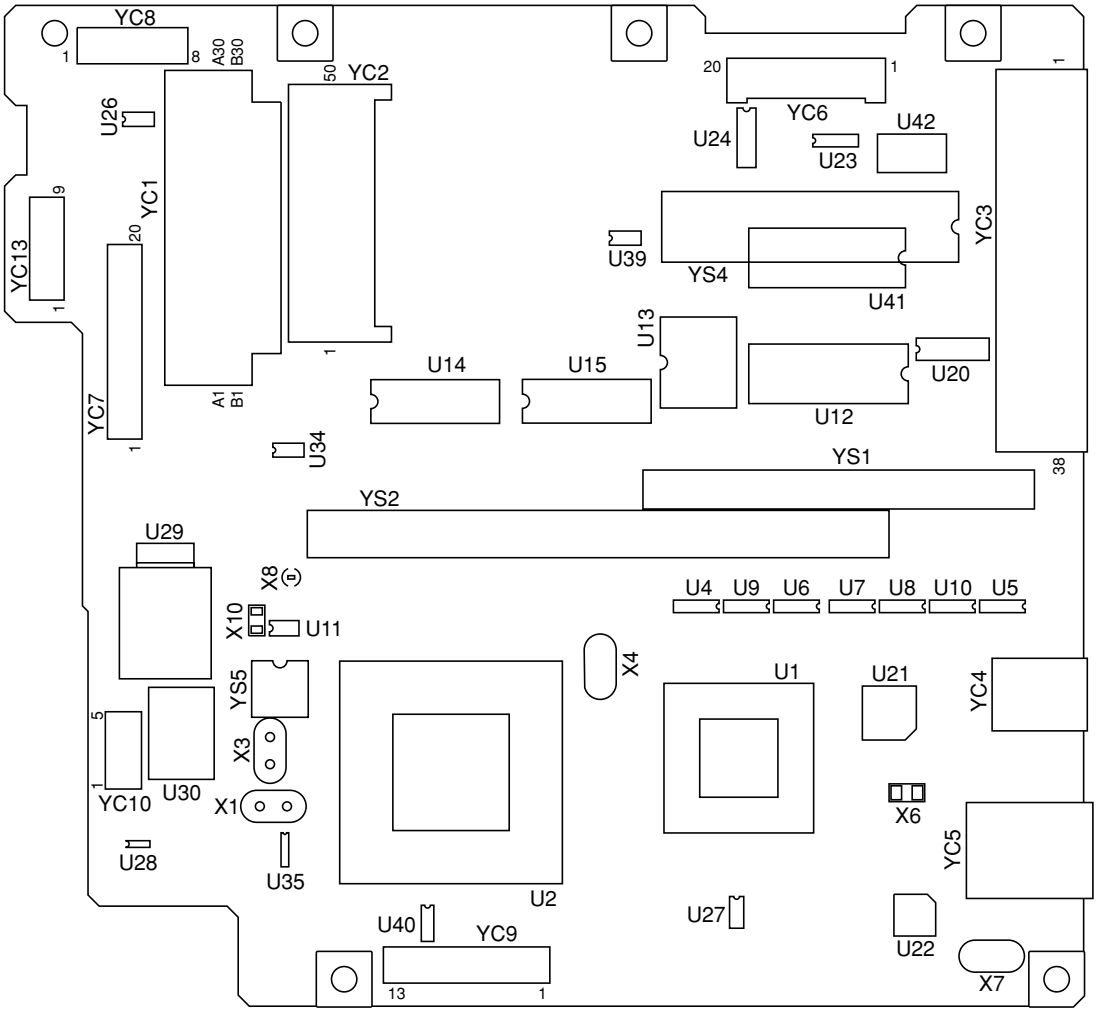

Figure 2-3-2 Main PWB silk-screen diagram

Connector	Pin No.	Signal	I/O	Description
YC1	A1	NC	-	Not used
Connected to the FAX control PWB	A2	NC	-	Not used
	A3	AUDIO	I	AUDIO signal
	A4	+3.3 V	O	3.3 V DC power supply
	A5	GND	-	Ground
	A6	A13	O	Address bus A13
	A7	A11	O	Address bus A11
	A8	A9	O	Address bus A9
	A9	GND	-	Ground
	A10	A6	O	Address bus A6
	A11	A4	O	Address bus A4
	A12	A2	O	Address bus A2
	A13	GND	-	Ground
	A14	OP2IFn	O	OP2IF signal
	A15	OP2IRn	I	OP2IR signal
	A16	RDY	O	Ready signal
	A17	GND	-	Ground
	A18	IORn	O	IOR signal
	A19	RESETn	O	Reset signal
	A20	D15	O	Data bus D15
	A21	GND	-	Ground
	A22	D12	O	Data bus D12
	A23	D10	O	Data bus D10
	A24	D8	O	Data bus D8
	A25	GND	-	Ground
	A26	D5	O	Data bus D5
	A27	D3	O	Data bus D3
	A28	D1	O	Data bus D1
	A29	GND	-	Ground
	A30	NC	-	Not used
	B1	NC	-	Not used
	B2	TXDREQ	I	TXDREQ signal
	B3	+3.3 V	O	3.3 V DC power supply
	B4	A15	O	Address bus A15
	B5	A14	O	Address bus A14
	B6	A12	O	Address bus A12
	B7	A10	O	Address bus A10
	B8	A8	O	Address bus A8
	B9	A7	O	Address bus A7
	B10	A5	O	Address bus A5
	B11	A3	O	Address bus A3
	B12	A1	O	Address bus A1
	B13	+3.3 V	O	3.3 V DC power supply
	B14	OP2ACKn	I	OP2ACK signal
	B15	+5 V	O	5 V DC power supply
	B16	RXDREQ	I	RXDREQ signal
	B17	RXDMACKn	O	RXDMACK signal
	B18	IOWn	O	IOW signal
	B19	TXDMACKn	O	TXDMACK signal
	B20	D14	O	Data bus D14
	B21	D13	O	Data bus D13
	B22	D11	O	Data bus D11
	B23	D9	O	Data bus D9
	B24	D7	O	Data bus D7
	B25	D6	O	Data bus D6
	B26	D4	O	Data bus D4
	B27	D2	O	Data bus D2
	B28	D0	O	Data bus D0
	B29	NC	-	Not used
	B30	NC	-	Not used

Connector	Pin No.	Signal	I/O	Description
YC2	1	GND	-	Ground
Connected to the compact flash socket	2	D3	O	Data bus D3
	3	D4	O	Data bus D4
	4	D5	O	Data bus D5
	5	D6	O	Data bus D6
	6	D7	O	Data bus D7
	7	CE1n	O	CE1 signal
	8	A10	O	Address bus A10
	9	OEn	O	OE signal
	10	A9	O	Address bus A9
	11	A8	O	Address bus A8
	12	A7	O	Address bus A7
	13	VCC	O	3.3 V DC power supply
	14	A6	O	Address bus A6
	15	A5	O	Address bus A5
	16	A4	O	Address bus A4
	17	A3	O	Address bus A3
	18	A2	O	Address bus A2
	19	A1	O	Address bus A1
	20	A0	O	Address bus A0
	21	D0	O	Data bus D0
	22	D1	O	Data bus D1
	23	D2	O	Data bus D2
	24	WP	-	Not used
	25	CD2n	I	CD2 signal
	26	CD1n	I	CD1 signal
	27	D11	O	Data bus D11
	28	D12	O	Data bus D12
	29	D13	O	Data bus D13
	30	D14	O	Data bus D14
	31	D15	O	Data bus D15
	32	CE2n	O	CE2 signal
	33	VS1n	O	VS1 signal
	34	IORDn	O	IORD signal
	35	IOWRn	O	IOWR signal
	36	WEn	O	WE signal
	37	RDY/BSYn	-	Not used
	38	VCC	O	3.3 V DC power supply
	39	CSELn	O	CSEL signal
	40	VS2n	-	Not used
	41	RESET	O	Reset signal
	42	WAITn	I	WAIT signal
	43	INPACKn	-	Not used
	44	REGn	O	REG signal
	45	BVD2n	-	Not used
	46	BVD1n	-	Not used
	47	D8	O	Data bus D8
	48	D9	O	Data bus D9
	49	D10	O	Data bus D10
	50	GND	-	Ground
YC3	1	STB	I	STB signal
Connected to the parallel I/F	2	DATA1	I	DATA1 signal
	3	DATA2	I	DATA2 signal
	4	DATA3	I	DATA3 signal
	5	DATA4	I	DATA4 signal
	6	DATA5	I	DATA5 signal
	7	DATA6	I	DATA6 signal
	8	DATA7	I	DATA7 signal
	9	DATA8	I	DATA8 signal
	10	ACK	O	ACK signal
	11	BUSY	O	BUSY signal

Connector	Pin No.	Signal	I/O	Description
YC3	12	PE	O	Paper empty signal
Connected to the parallel I/F	13	SEL	O	Select signal
	14	CAN	I	CAN signal
	15	RMR	-	Not used
	16	SG	-	Ground
	17	FG	-	Ground
	18	INIT	O	5 V DC power supply
	19	GND	-	Ground
	20	GND	-	Ground
	21	GND	-	Ground
	22	GND	-	Ground
	23	GND	-	Ground
	24	GND	-	Ground
	25	GND	-	Ground
	26	GND	-	Ground
	27	GND	-	Ground
	28	GND	-	Ground
	29	GND	-	Ground
	30	ARARM	-	Ground
	31	ASFON	-	Not used
	32	FAULT	O	FAULT signal
	33	HSTI	-	Not used
	34	EXPRM	-	Not used
	35	PRDY	O	Power ready signal
	36	SELI	-	Not used
YC4	1	VBUS	I	VBUS signal
Connected to the USB	2	DATA-	O	DATA- signal
	3	DATA+	O	DATA+ signal
	4	GND	-	Ground
YC5	1	TXOP	O	TXOP signal
Connected to the Ethernet	2	+3.3 V	O	3.3 V DC power supply
	3	TXON	O	TXON signal
	4	RXIP	I	RXIP signal
	5	+3.3 V	O	3.3 V DC power supply
	6	RXIN	I	RXIN signal
	7	NC	-	Not used
	8	GND	-	Ground
	9	+3.3 V	O	3.3 V DC power supply
	10	/LEDL	I	LEDL signal
	11	+3.3 V	O	3.3 V DC power supply
	12	LEDN	I	LEDN signal
YC6	1	SHRGB	O	RGB shift signal
Connected to the scanner PWB	2	SW	O	Color/monochro control signal
	3	SWN	O	Color/monochro control signal
	4	CCDCLKN	O	CCD clock signal
	5	GND	-	Ground
	6	CCDCLK	O	CCD clock signal
	7	GND	-	Ground
	8	RSN	O	CCD RS signal
	9	GND	-	Ground
	10	CPN	O	CCD CP signal
	11	GND	-	Ground
	12	SH	O	CCD shift signal
	13	GND	-	Ground
	14	GND	-	Ground
	15	GND	-	Ground
	16	CCDG(O)	I	Image data G (green) signal (analog)
	17	GND	-	Ground
	18	CCDB(E)	I	Image data B (blue) signal (analog)

Connector	Pin No.	Signal	I/O	Description
YC6	19	GND	-	Ground
Connected to the scanner PWB	20	CCDR	I	Image data R (red) signal (analog)
YC7	1	SGND	-	Ground
Connected to the engine PWB	2	SGND	-	Ground
	3	+3.3 V	I	3.3 V DC power supply
	4	+3.3 V	I	3.3 V DC power supply
	5	+5 V	I	5 V DC power supply
	6	OUTPEN	I	OUTPEN signal
	7	SGND	-	Ground
	8	PLGCLK	O	PLGCLK signal
	9	EGSO	I	EGSO signal
	10	SCKN	O	SCKN signal
	11	EGSI	O	EGSI signal
	12	PDMASKN	I	PDMASKN signal
	13	SBSY	I	SBSY signal
	14	SDIR	I	SDIR signal
	15	EGRN	I	EGRN signal
	16	SGND	-	Ground
	17	RSTN	I	RSTN signal
	18	SGND	-	Ground
	19	OVSYNC	I	OVSYNC signal
	20	SGND	-	Ground
YC8	1	SGND	-	Ground
Connected to the laser scanner unit	2	SAMPLEN	O	SAMPLEN signal
	3	VDATA	O	VDATA signal
	4	OUTPEN	O	OUTPEN signal
	5	SGND	-	Ground
	6	+5 V	O	5 V DC power supply
	7	SGND	-	Ground
	8	PDN	I	Horizontal synchronization signal
YC10	1	+5 V	O	5 V DC power supply
Connected to the debugger I/F	2	DBTXD	O	DBTXD signal
	3	DBRXD	I	DBRXD signal
	4	DBCLK	I	DBCLK signal
	5	GND	-	Ground
YC13	1	SGND	-	Ground
Connected to the scanner PWB	2	AUDIO	O	AUDIO signal
	3	+5 V	O	5 V DC power supply
	4	FPRSTN	O	FPRSTN signal
	5	PANTXD	O	PANTXD signal
	6	PANRXD	I	PANRXD signal
	7	PANRTS	O	PANRTS signal
	8	PANCTS	I	PANCTS signal
	9	+3.3 V	O	3.3 V DC power supply

2-3-2 Engine PWB

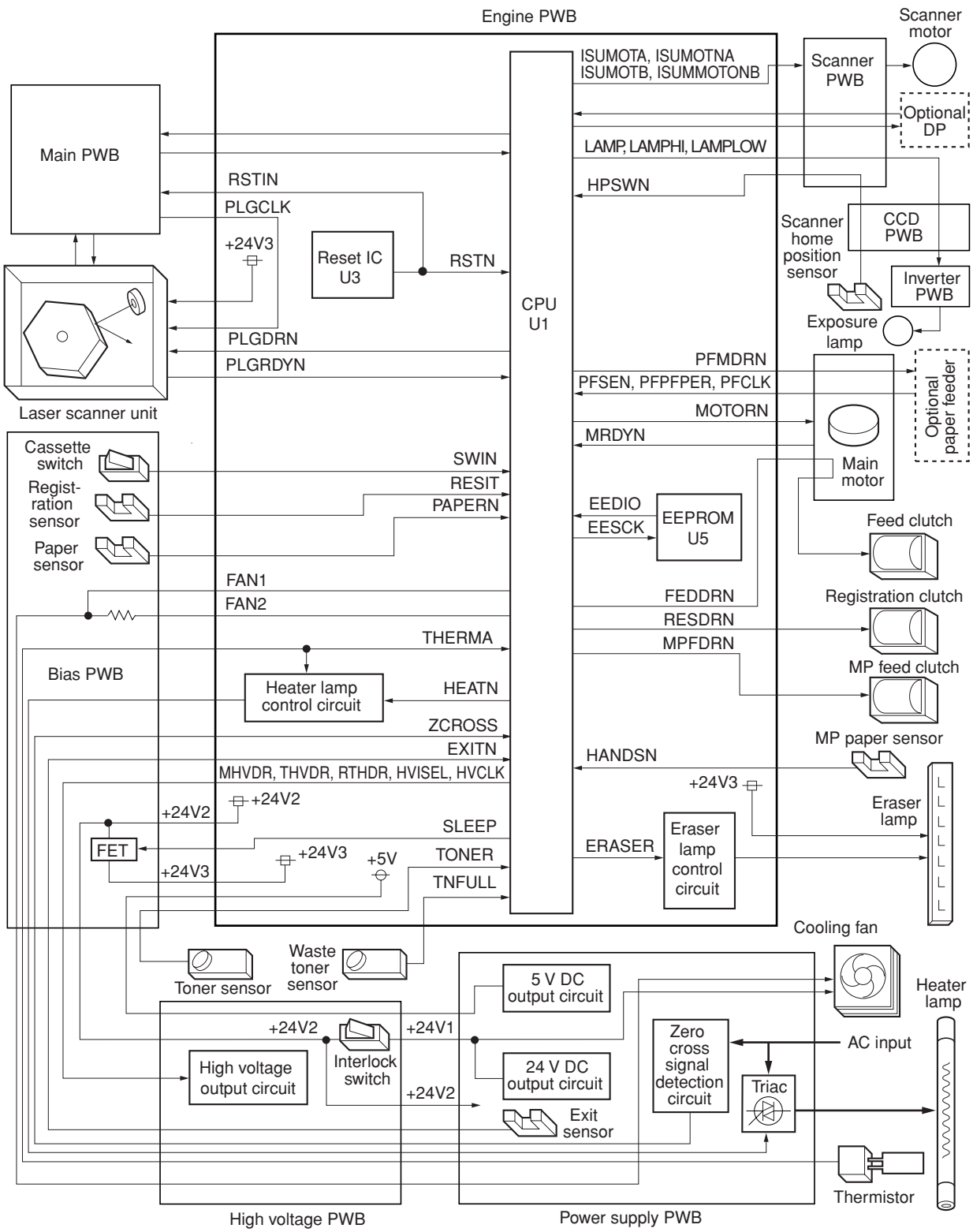

Figure 2-3-3 Engine PWB circuit block diagram

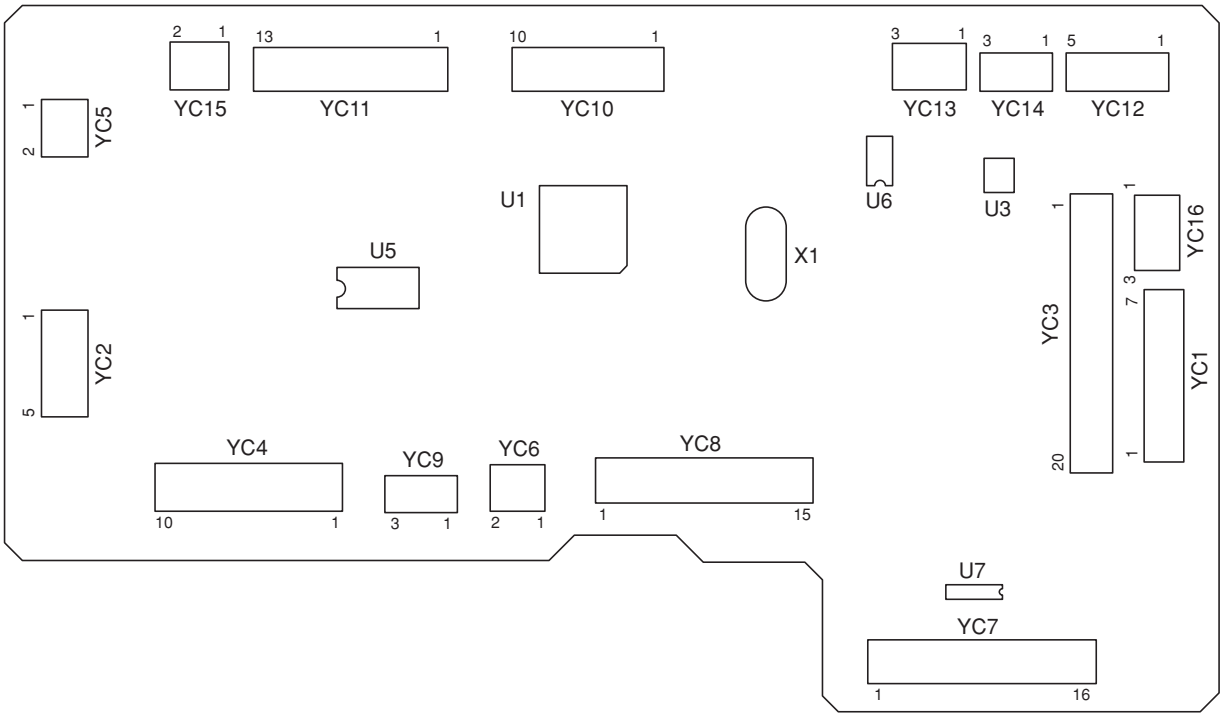

Figure 2-3-4 Engine PWB silk-screen diagram

(1) Eraser lamp control circuit

The CPU (U1) turns pin #86 (ERASER) of U1 to H level, transistors (Q18) turns on consequently, and the 24 V DC given at pin #1 of connector YC14 applies to the eraser lamps. The eraser lamps thus illuminate as the current flows through the eraser lamp, the pin #2 of connector YC14, resistors (R109, R110, and R111), transistor Q18 and the ground.

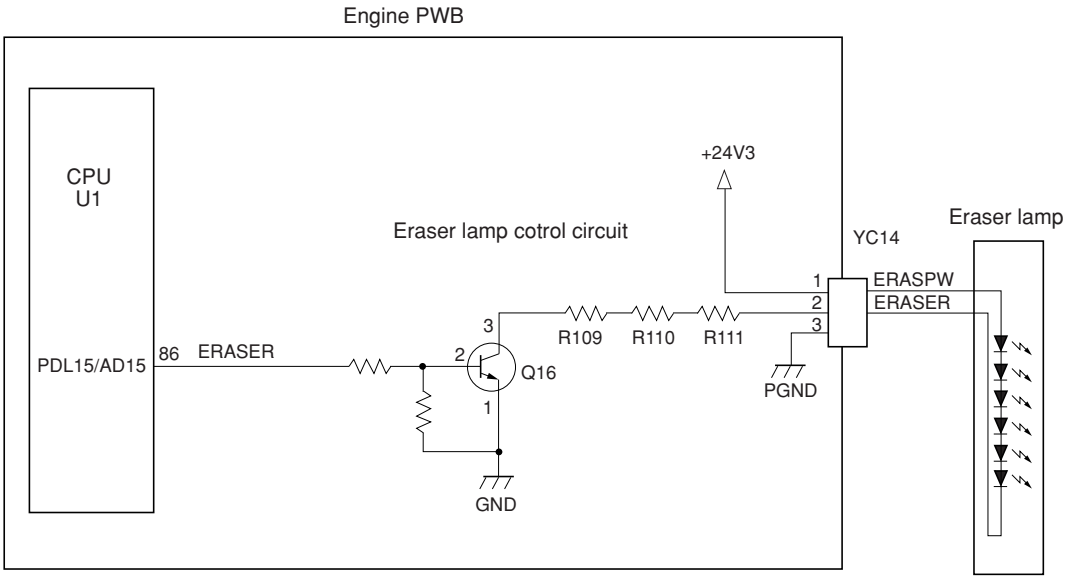

Figure 2-3-5 Eraser lamp control circuit

(2) Heater lamp control circuit

Activation of the heater lamp is dominated by the HEAT signal which is derived by the engine CPU (U1) at its pin #74. When its level is high, transistor Q8 turns on, photo-triac PC2 and triac TRC1 turn on simultaneously, and the heater lamp is applied with the primary AC voltage in turn.

Switching of triac TRC1, as affected by the HEAT signal is made in synchronization with the zero-cross signal ZCROSS which is generated by the power supply unit. The zero-cross signal detector watches the transition of alternating plus and negative current and detects the zero crosses. This detector derives the resultant ZCROSS signal at its pin #20 of the engine CPU (U1). Since abrupt change in the current flow can be significantly avoided by synchronizing triac TRC1 with the zero-cross signal, the possibility of noise due to the primary AC supply is greatly reduced.

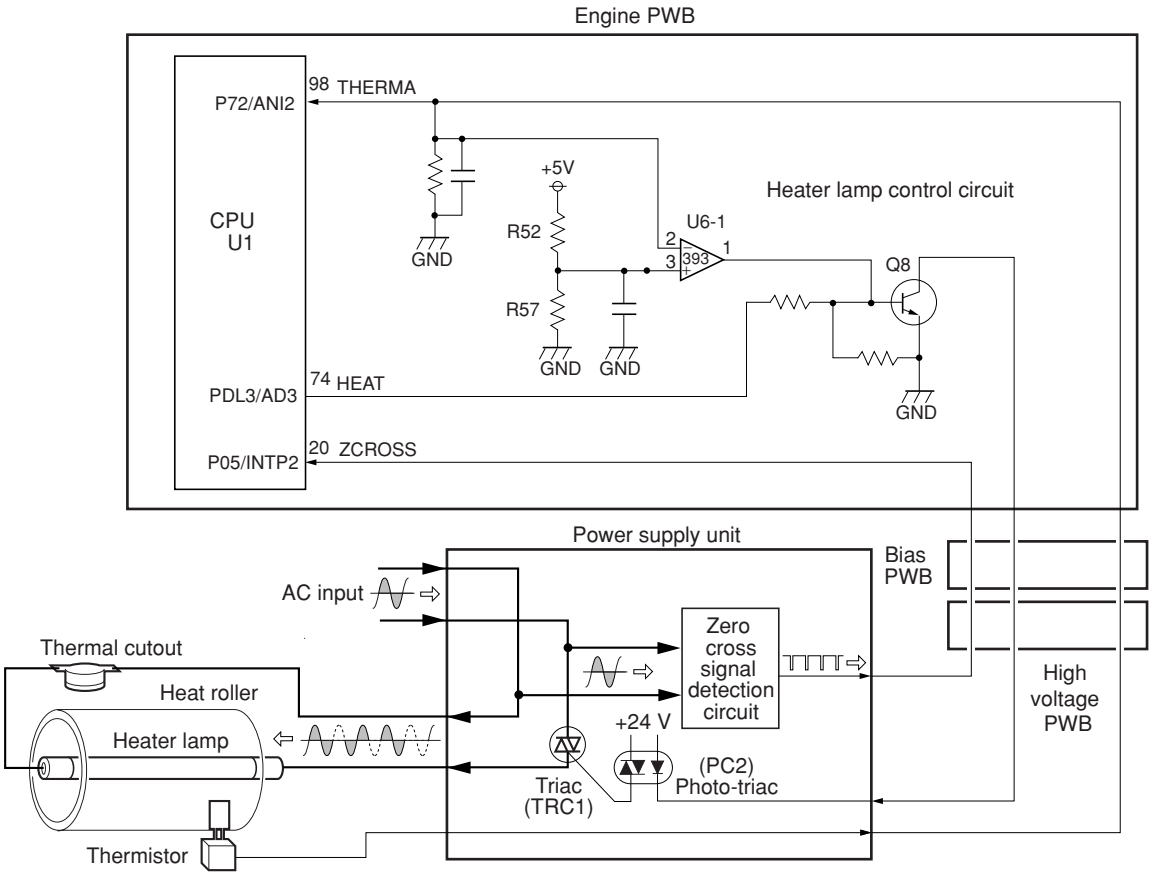

Figure 2-3-6 Heater lamp control circuit

The AC power for the heater is applied in one of the five variations of the zero cross switchings as shown in Figure 2-3-7. Each variation is constituted with the unit of ten positive and negative envelops in five cycles, as obtained by varying the duration during which TRC1 turns on. The heater lamp is energized while TRC1 is kept on; the heater lamp is turned off while TRC1 is kept off. For example, the duty cycle (the period of a cycle during which the heater lamp is turned on) is maximum for variation No.1 as the heater lamp is energized for the whole envelops. The duty cycle is 60 % for variation No.3 as the heater lamp is energized for the 6 positive and negative envelops out of 10. The duty cycle is 0 since the heater lamp is kept turned off for the whole envelops.

CPU (U1) selectively switches among those variations for applying voltages to the heater lamp according to the THERMA signal which appears at pin #98 as feedback.

A fraction of THERMA is applied to pin #2 of comparator U6-1. The comparator maintains comparison of the potential at pin #2 and pin #3 which gives a reference for the possible anomaly in the heater temperature (bred by resistors R52 and R57). Should the voltage at pin #2 exceed that at pin #98, the level at pin #1 becomes low. Since pin #1 is wired to the output line for the HEAT signal, the HEAT signal is enforced to be low regardless the behavior of CPU (U1), thus preventing possible heat overrun.

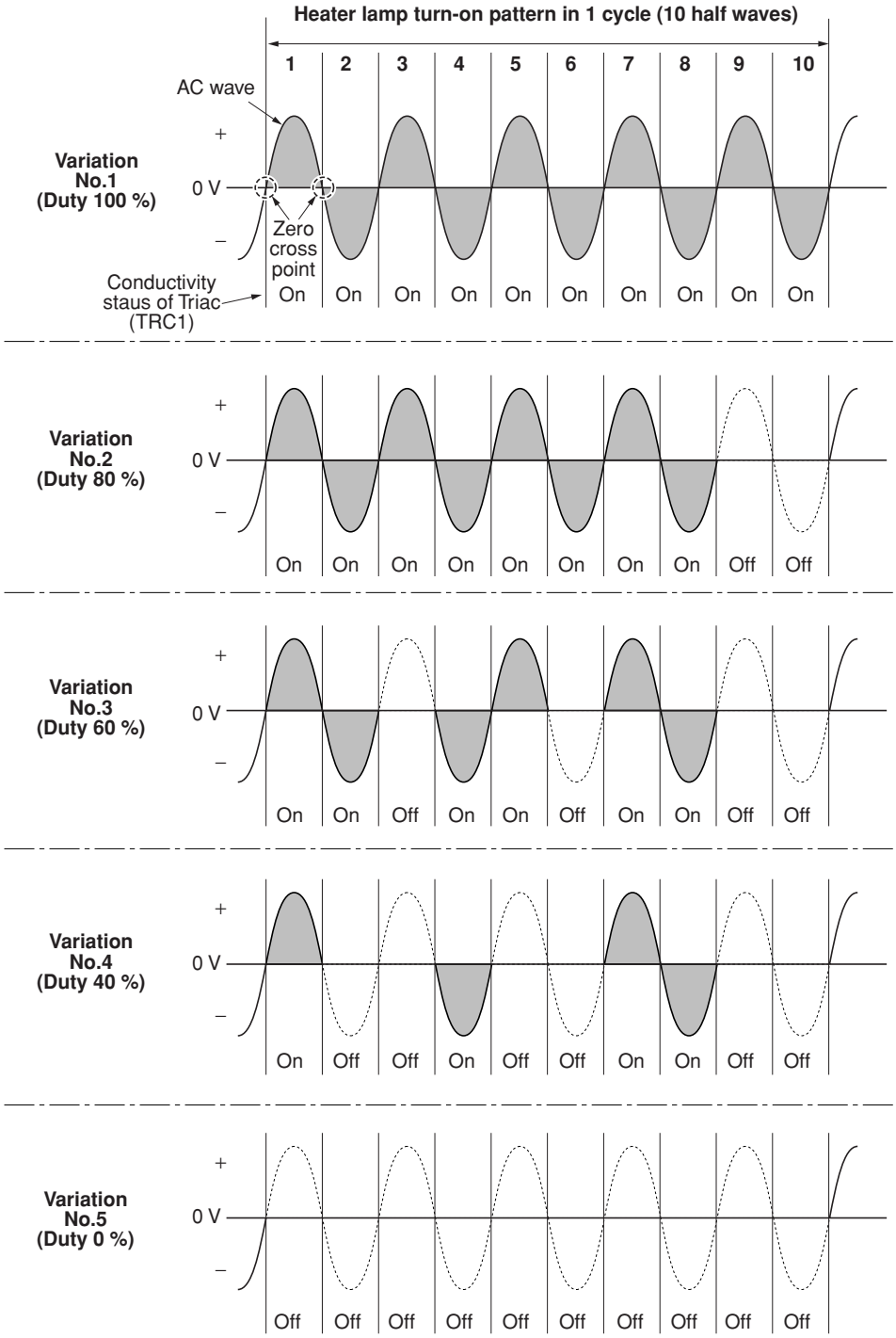

Figure 2-3-7 Heater lamp turn-on variations

(3) Polygon motor control circuit

The main controller PWB supplies the 2598.4 Hz clock pulse (PLGCLK) via the engine PWB to the PLL control IC (IC1) for the polygon motor. To begin printing, the engine CPU U1 turns PLGDR to H level, the PLL control IC (IC1) starts to revolve the polygon motor so that the revolution is 25,984 rpm which depends on the PLGCLK clock pulse. When PLL control IC (IC1) finds that the polygon motor is revolving at the rated speed, turns PLGDRN to L level to acknowledge the engine CPU that the rated speed has been achieved.

On the contrary, if PLGRDYN does not turn to L level within 8 seconds since PLGDRN has been L level.

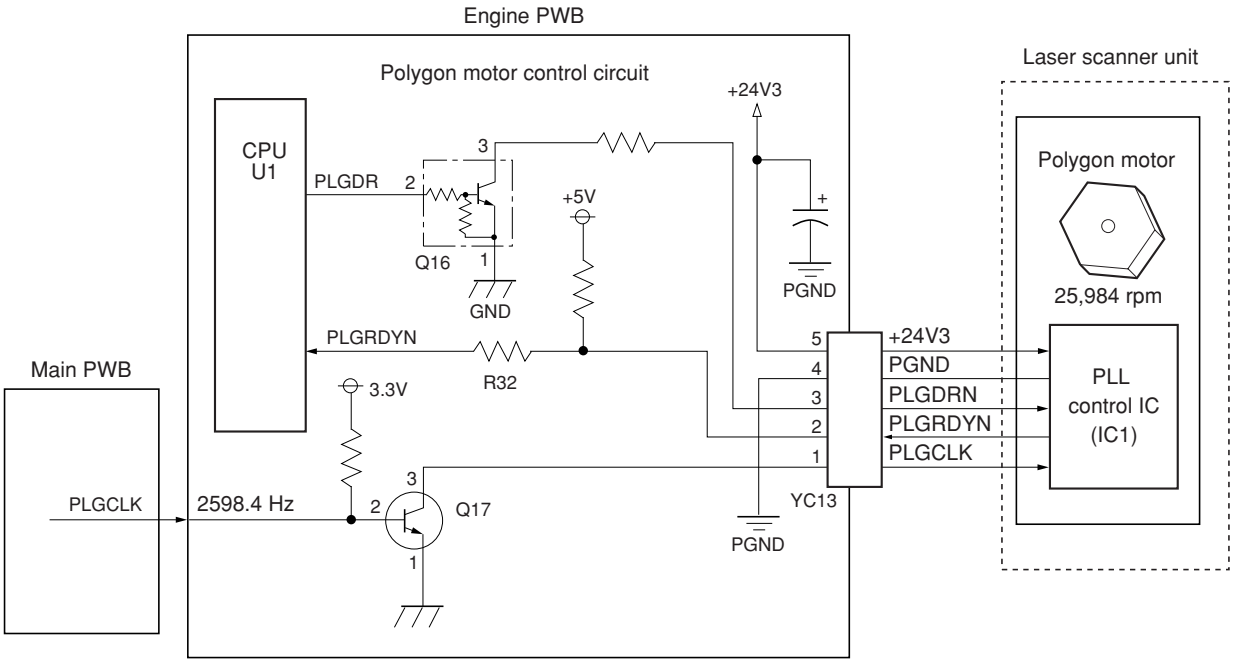

Figure 2-3-8 Polygon motor control circuit

Connector	Pin No.	Signal	I/O	Description
YC3	1	SGND	-	Ground
Connected to the main PWB	2	OVSYNK	O	OVSYNK signal
	3	SGND	-	Ground
	4	RSTN	O	RSTN signal
	5	SGND	-	Ground
	6	EGRN	O	EGRN signal
	7	SDIR	O	SDIR signal
	8	SBSY	O	SBSY signal
	9	PDMASKN	O	PDMASKN signal
	10	EGSI	I	EGSI signal
	11	SCKN	I	SCKN signal
	12	EGSO	O	EGSO signal
	13	PLGCLK	I	PLGCLK signal
	14	SGND	-	Ground
	15	OUTPEN	O	OUTPEN signal
	16	+5 V	O	5 V DC power supply
	17	+3.3 V	O	3.3 V DC power supply
	18	+3.3 V	O	3.3 V DC power supply
	19	SGND	-	Ground
	20	SGND	-	Ground
YC4	1	FEDDRN	O	Feed clutch: On/Off
Connected to the main motor	2	PFSEN	I	Paper feeder control signal
	3	PFPER	I	Paper feeder control signal
	4	PFCLK	O	Paper feeder control signal
	5	PFMDRN	O	Paper feeder control signal
	6	PGND	-	Ground
	7	+5 V	O	5 V DC power supply
	8	MRDYN	I	Main motor ready signal
	9	MOTORN	O	Main motor: On/Off
	10	+24 V3	O	24 V DC power supply
YC5	1	+24 V3	O	24 V DC power supply
Connected to the MP feed clutch	2	MPFDRN	O	MP feed clutch: On/Off
YC6	1	+24 V3	O	24 V DC power supply
Connected to the registration clutch	2	REGDRN	O	Registration clutch: On/Off
YC7	1	HEATN	O	Heater lamp: On/Off
Connected to the bias PWB	2	HVISEL	O	HVISEL signal
	3	+5 V	O	5 V DC power supply
	4	SLEEPS	O	Sleep mode signal: On/Off
	5	SLEEP24	O	Sleep mode signal: On/Off
	6	PSEL1	O	PSEL1 signal
	7	EXITN	I	Exit sensor: On/Off
	8	MHVDR2	O	Main charger grid bias voltage
	9	ZCROSS	I	Zero-cross signal
	10	HVCLK	O	HVCLK signal
	11	+5 V	O	5 V DC power supply
	12	+5 V	O	5 V DC power supply
	13	+5 V	O	5 V DC power supply
	14	SGND	-	Ground
	15	SGND	-	Ground
	16	SGND	-	Ground

Connector	Pin No.	Signal	I/O	Description
YC8	1	+24 V3	O	24 V DC power supply
Connected to the bias PWB	2	+24 V3	O	24 V DC power supply
	3	PGND	-	Ground
	4	PGND	-	Ground
	5	PAPERN	I	Paper sensor: On/Off
	6	SWIN	I	Cassette switch: On/Off
	7	RESIT	I	Registration sensor: On/Off
	8	TONEREPY	I	Toner sensor: On/Off
	9	+24 V2	O	24 V DC power supply
	10	MHVDR1	O	Main charger grid bias voltage
	11	FAN2	O	Cooling fan: On/Off
	12	FAN1	O	Cooling fan: On/Off
	13	THVDR	O	Transfer roller bias voltage
	14	THERM	I	Thermistor detection voltage
	15	RTHVDR	O	Separation charger bias voltage
YC9	1	+5 V	O	5 V DC power supply
Connected to the MP paper sensor	2	HANDSN	I	MP paper sensor: On/Off
	3	SGND	-	Ground
YC10	1	TEMP	I	Temperature detection data
Connected to the scanner PWB	2	+5 V	O	5 V DC power supply
	3	SGND	-	Ground
	4	HPSWN	I	Scanner home position sensor: On/Off
	5	DPDETN	I	Optonal DP status: Installed/Not installed
	6	DPTIMSWN	I	DPTSW: On/Off
	7	DPORGSWN	I	OSLSW: On/Off
	8	DPCOVSWIN	I	DPSSW1: On/Off
	9	OPSWIN	I	DPSSW2: On/Off
	10	CCDSLEPN	O	CCD sleep signal
YC11	1	MOTA	O	OCM drive control signal
Connected to the scanner PWB	2	MOTNA	O	OCM drive control signal
	3	MOTB	O	OCM drive control signal
	4	MOTNB	O	OCM drive control signal
	5	DPMOT0	O	OFM drive control signal
	6	DPMOT1	O	OFM drive control signal
	7	SCANMOT0	O	Scanner motor drive control signal
	8	SCANMOT1	O	Scanner motor drive control signal
	9	LAMP	O	Exposure lamp: On/Off
	10	LAMPHI	O	Exposure lamp control signal
	11	LAMPLOW	O	Exposure lamp control signal
	12	PGND	-	Ground
	13	+24 V3	O	24 V DC power supply
YC12	1	+5 V	O	5 V DC power supply
Connected to the waste toner sensor	2	TNFULL	I	Waste toner sensor: On/Off
	3	SGND	-	Ground
YC13	1	PLGCLK	O	Polygon motor rotation clock
Connected to the laser scanner unit	2	PLGRDYN	I	Polygon motor rotation status
	3	PLGDRN	O	Polygon motor: On/Off
	4	PGND	-	Ground
	5	+24 V3	O	24 V DC power supply

Connector	Pin No.	Signal	I/O	Description
YC14	1	ERASPW	O	24 V DC power supply
Connected to the eraser lamp	2	ERASERN	O	Eraser lamp: On/Off
	3	PGND	-	Ground

2-3-3 Power supply PWB

The power supply PWB provides the AC power input and DC power and outputs. The high voltage bias generator circuit is mounted on a separate PWB. A simplified schematic diagram is shown below.

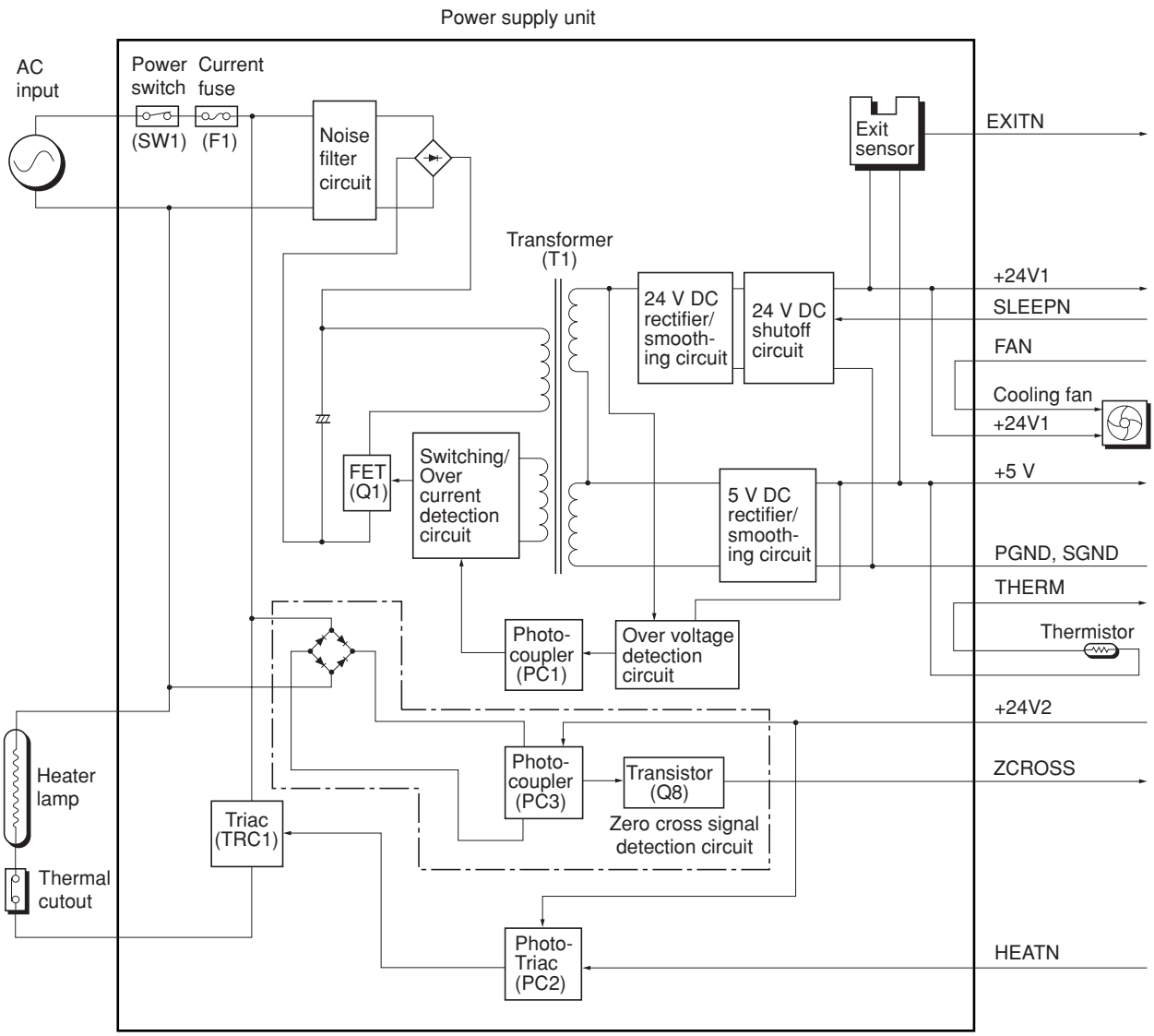

Figure 2-3-9 Power supply PWB circuit block diagram

• **100 V**

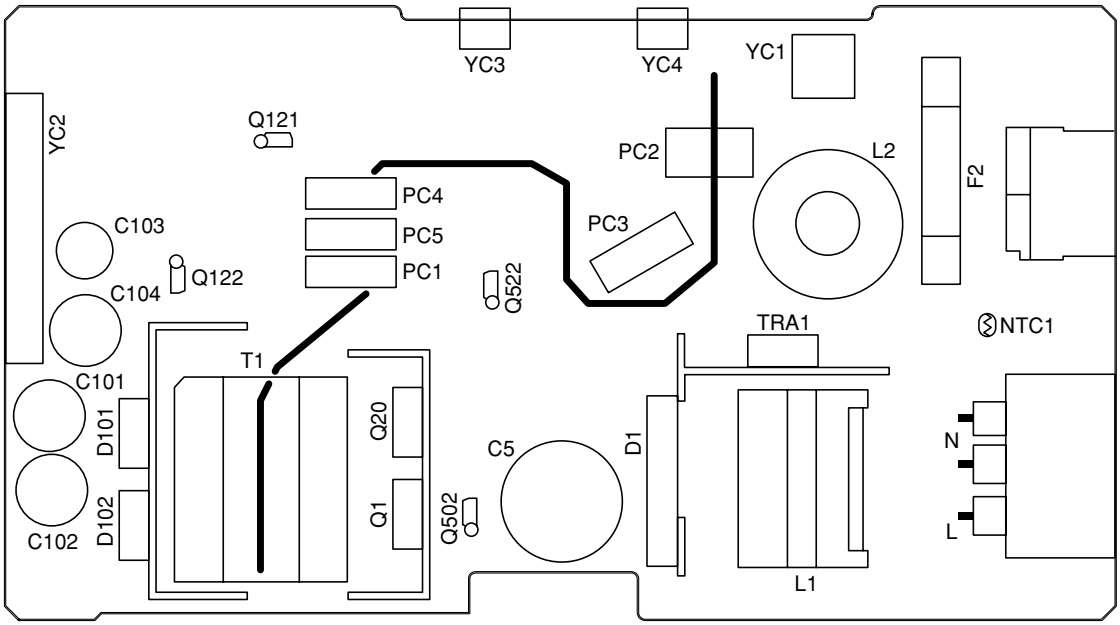

• **200 V**

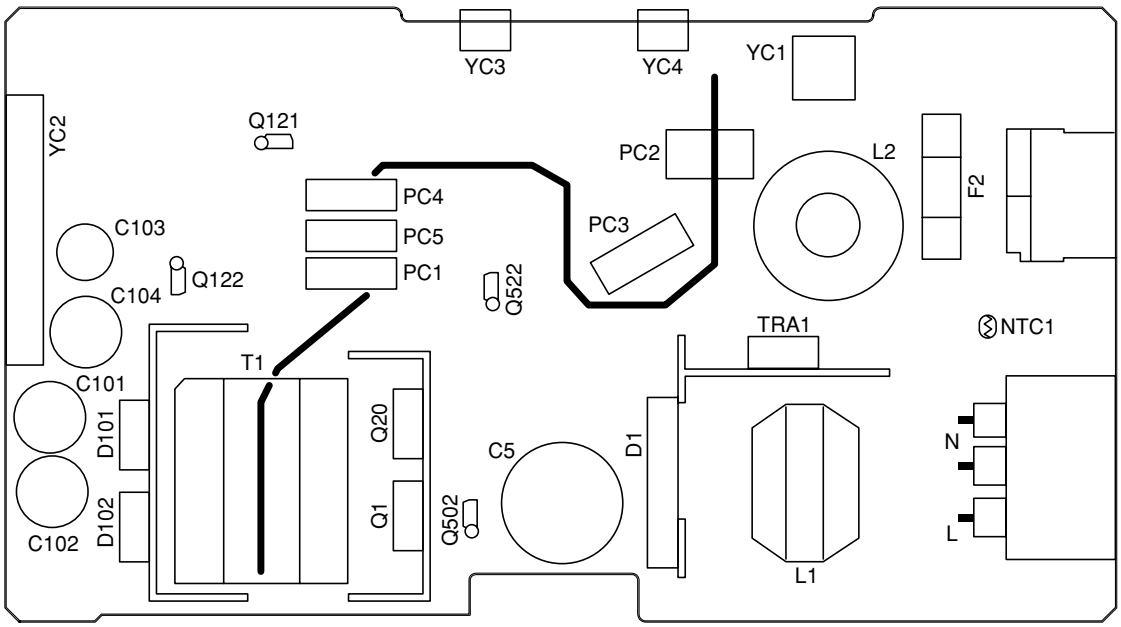

Figure 2-3-10 Power supply PWB silk-screen diagram

2-3-4 Bias PWB

The bias PWB contains the developing bias output circuit, registration sensor, paper empty sensor, and the cassette switch. It also provides a liaison connection to the high voltage PWB, power supply, and the toner sensor.

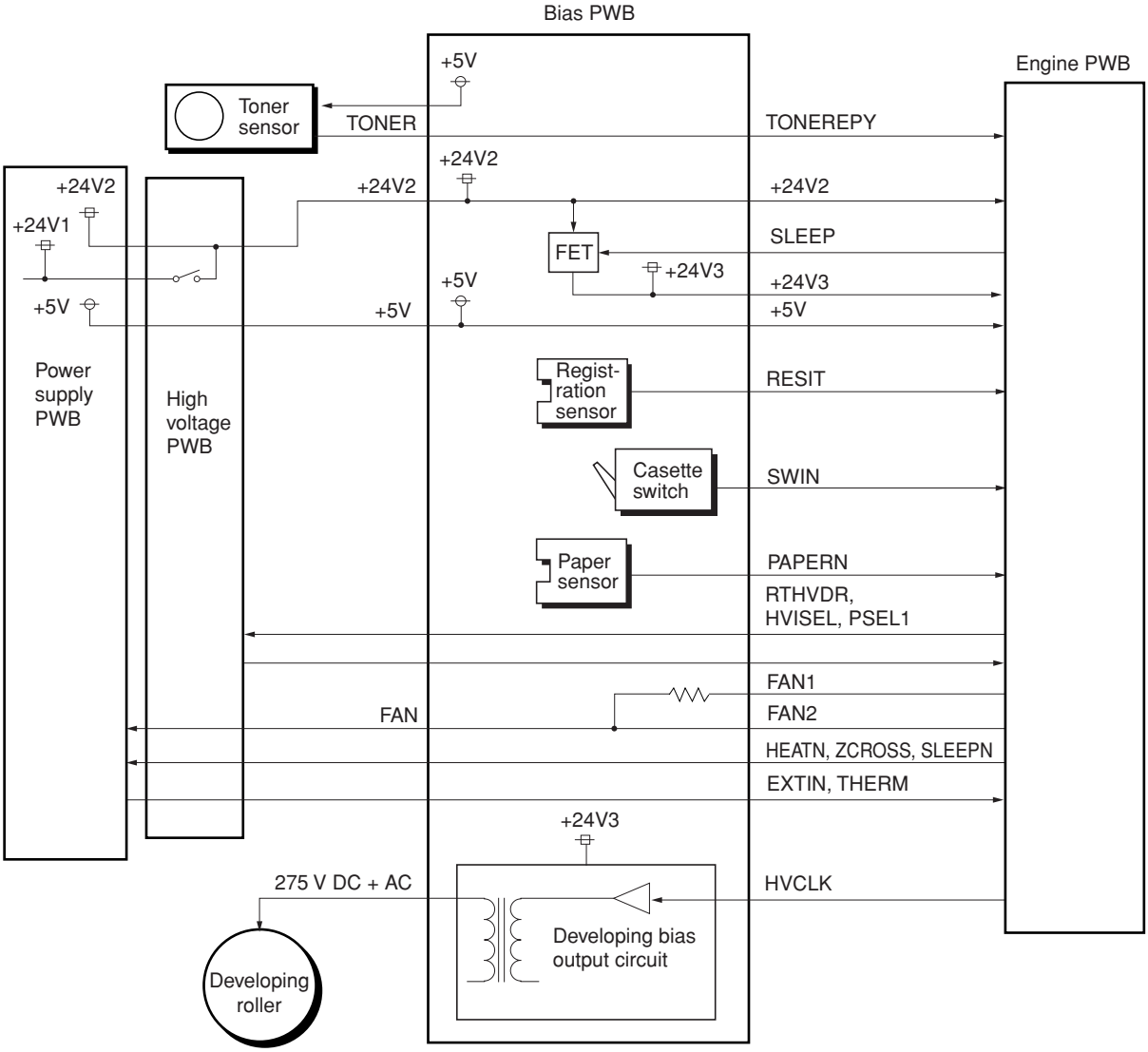

Figure 2-3-11 Bias PWB circuit block diagram

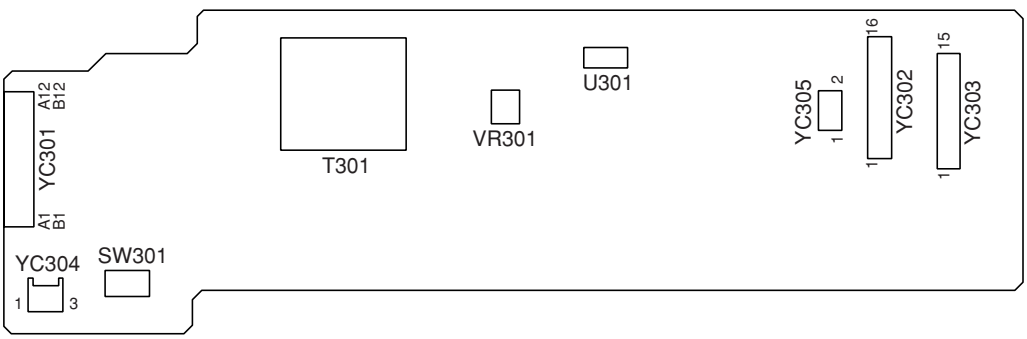

Figure 2-3-12 Bias PWB silk-screen diagram

2-3-5 High voltage PWB

The high voltage PWB contains the high voltage output circuit, interlock switch circuit as well as providing a liaison connection with the power supply PWB, bias PWB, and the engine PWB.

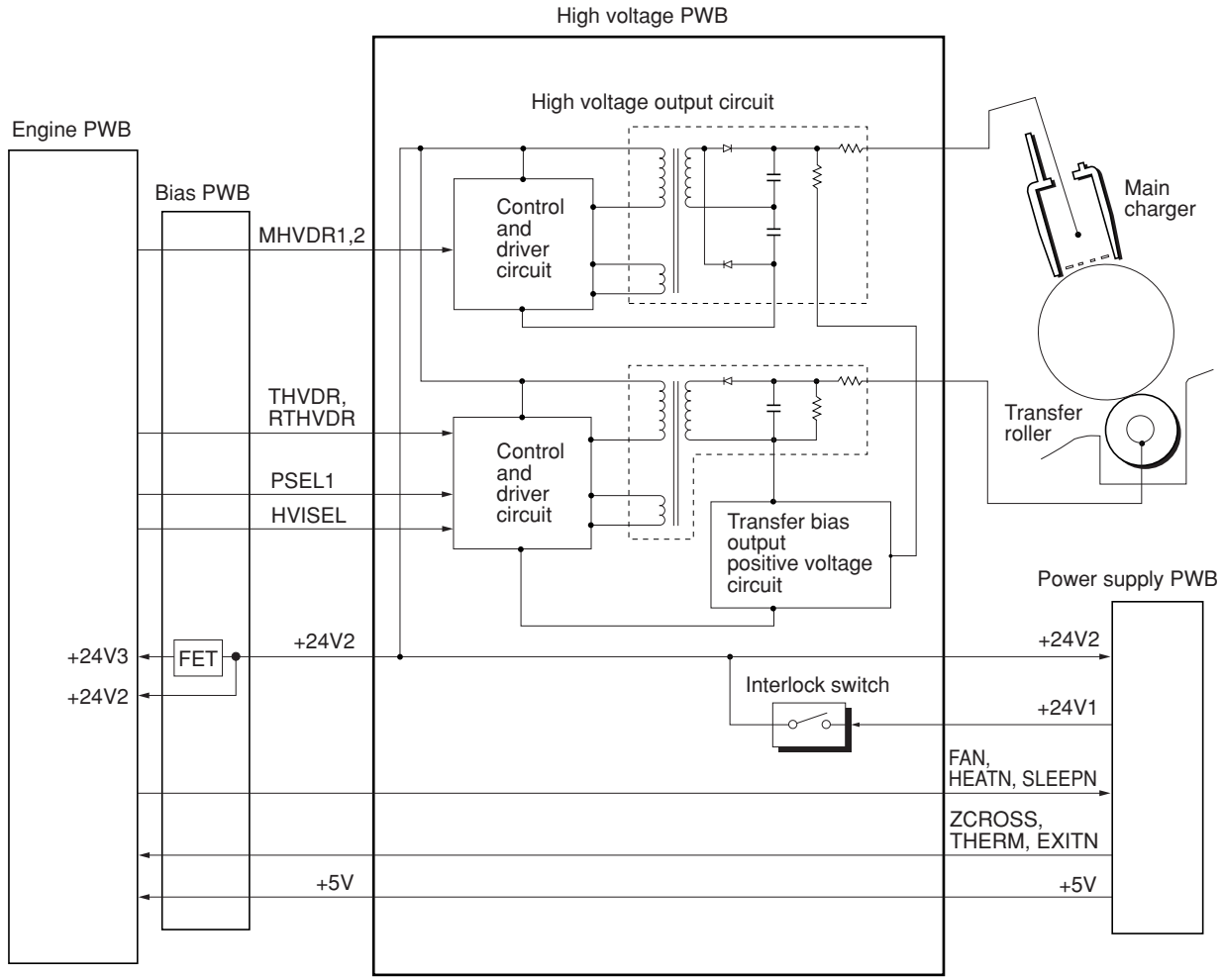

Figure 2-3-13 High voltage PWB circuit block diagram

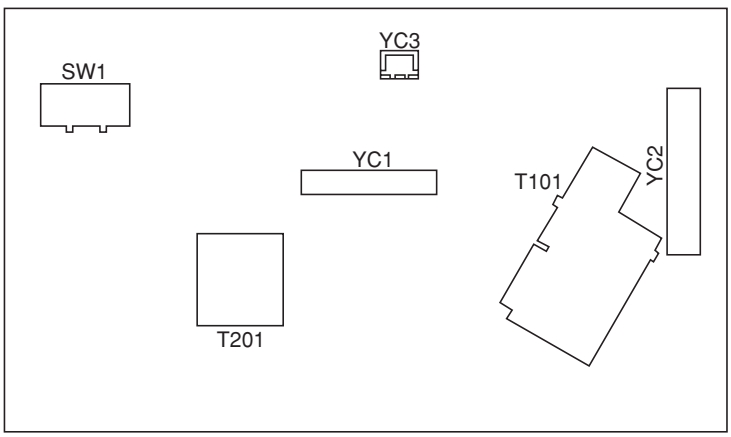

Figure 2-3-14 High voltage PWB silk-screen diagram

(1) Interlock switch

The interlock switch is located on the high voltage PWB and opened and closed in conjunction with the front cover or the front top cover via the interlock lever. This switch connects and disconnects the +24 V DC power supply line. If the front cover or the front top cover is open, the interlock switch is open, and the +24 V DC to the high voltage output circuit, bias PWB, engine PWB, and the power supply PWB is disconnected, deactivating the high voltage output, laser output, main motor output for safety. The cooling fan is an exception: Since the cooling fan is directly fed with +24 V DC from the power supply unit at the primary side (+24V1) of the interlock switch, the cooling fan is not deactivated even the cover is open.

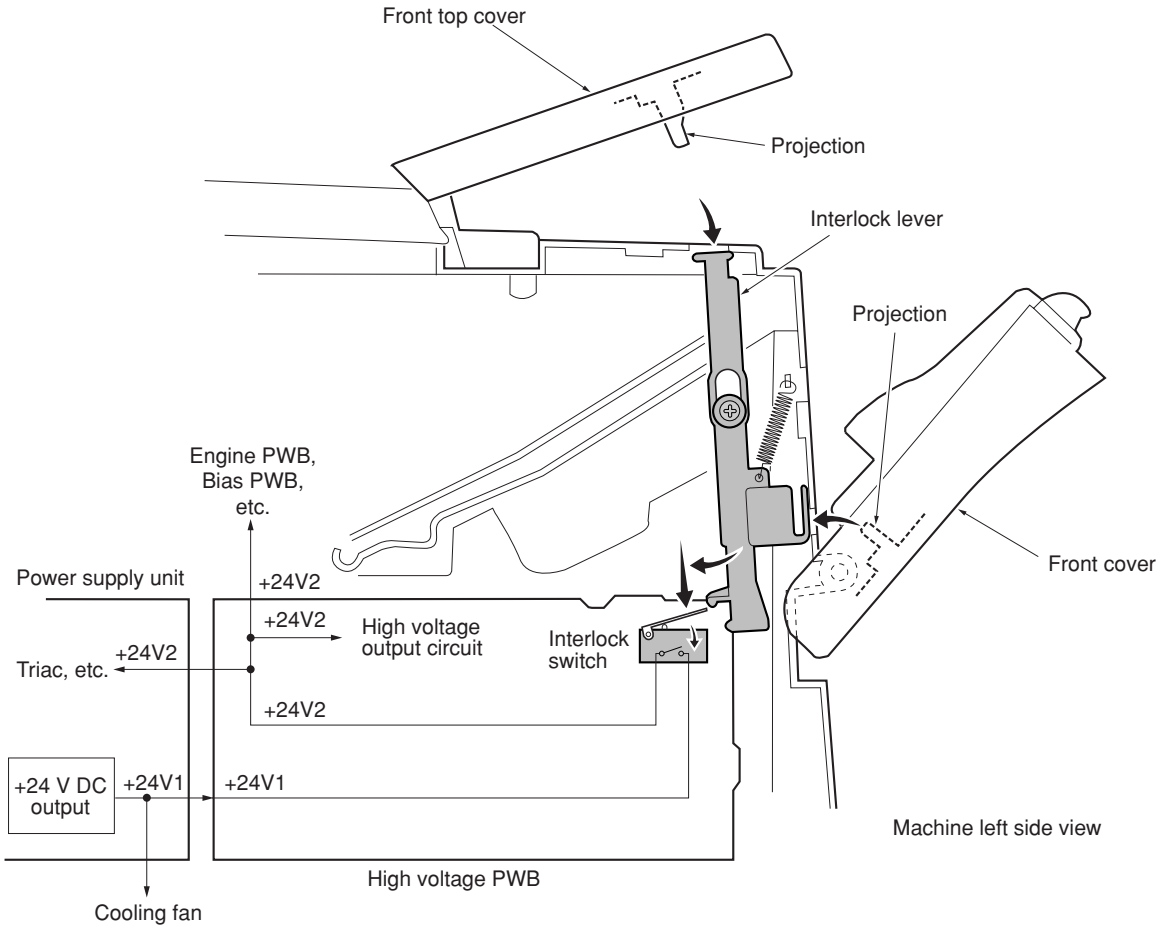

Figure 2-3-15 Interlock switch

2-3-6 CCD PWB

The CCD PWB consists mainly of a CCD sensor (U4) that scans an original. The CCD sensor (U4) is driven to scan an original by the CCD sensor control signals (CCDCLKN, SH_BW, SH_RGB, SW, SWN, CPN, and RSN) based on the clock for driving the CCD sensor (CCDCLK) supplied from the main PWB through the scanner PWB.
The image signals obtained from scanning of an original are divided into three analog signals (CCDR2, CCDG2, and CCDB2) for output. These signals are current-amplified by the amplification circuit that consists of operational amplifiers (U6 and U7), and so on and transmitted to the analog signal processing circuit on the main PWB through the scanner PWB. Also the CCD PWB relays signal lines of the scanner home position sensor and the exposure lamp.

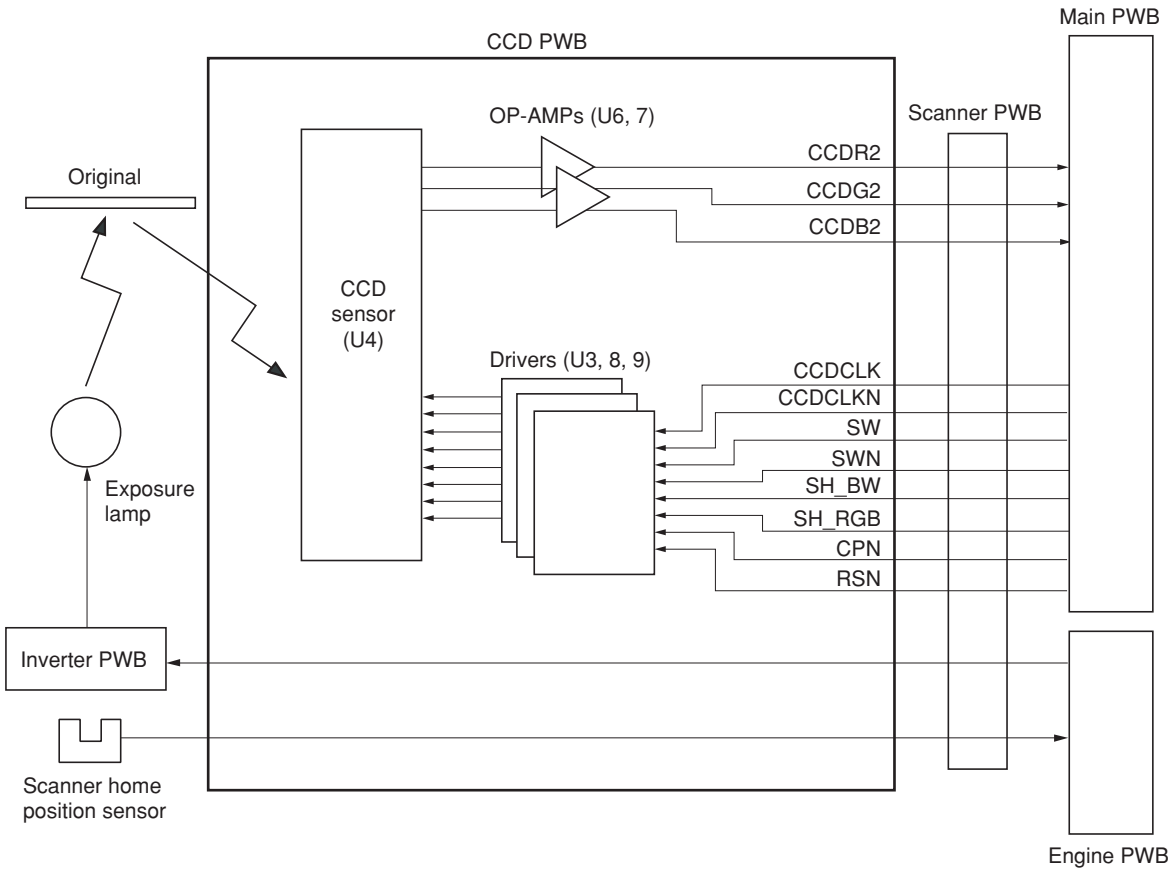

Figure 2-3-16 CCD PWB circuit block diagram

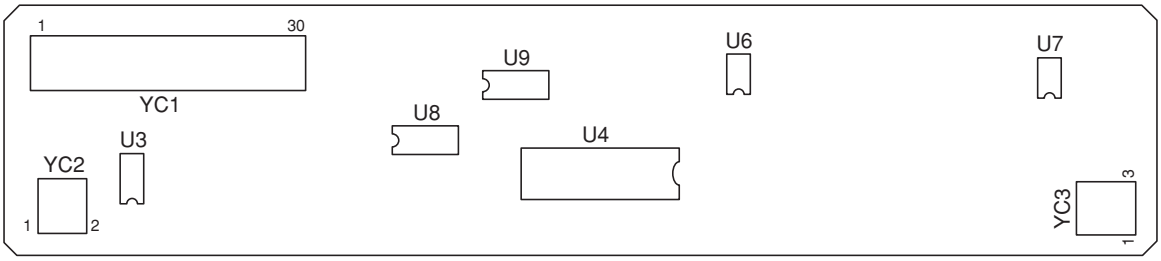

Figure 2-3-17 CCD PWB silk-screen diagram

Connector	Pin No.	Signal	I/O	Description
YC1	1	GND	-	Ground
Connected to the scanner PWB	2	GND	-	Ground
	3	GND	-	Ground
	4	SW	I	Color/monochro control signal
	5	SWN	I	Color/monochro control signal
	6	SH	I	CCD shift signal
	7	GND	-	Ground
	8	CPN	I	CCD CP signal
	9	GND	-	Ground
	10	RSN	I	CCD RS signal
	11	GND	-	Ground
	12	CCDCLK	I	CCD clock signal
	13	GND	-	Ground
	14	CCDCLKN	I	CCD clock signal
	15	GND	-	Ground
	16	GND	-	Ground
	17	GND	-	Ground
	18	CCDG(O)	O	Image data G (green) signal (analog)
	19	GND	-	Ground
	20	CCDB(E)	O	Image data B (blue) signal (analog)
	21	GND	-	Ground
	22	CCDR	O	Image data R (red) signal (analog)
	23	+12 V	I	12 V DC power supply
	24	+5 V	I	5 V DC power supply
	25	+5 V	I	5 V DC power supply
	26	HPSWN	O	Scanner home position sensor: On/Off
	27	PGND	-	Ground
	28	PGND	-	Ground
	29	LAMP	I	Exposure lamp: On/Off
	30	LAMP	I	Exposure lamp: On/Off
YC2	1	LAMP	O	Exposure lamp: On/Off
Connected to the inverter PWB	2	PGND	-	Ground
YC3	1	GND	-	Ground
Connected to the scanner home position sensor	2	HPSWN	I	Scanner home position sensor: On/Off
	3	+5 V	O	5 V DC power supply

2-3-7 Operation PWB

The operation PWB consists of key switches and LEDs. The lighting of LEDs is determined by scan signals (SCAN0 to SCAN7) and LED lighting selection signals (LED0 to LED3) from the main PWB. The key switches operated are identified by the scan signals (SCAN0 to SCAN7) and the return signals (KEYIN0 to KEYIN7).
As an example, to light LEDG9, the LED lighting selection signal (LED3) should be driven low in synchronization with a low level on the scan signal (SCAN0). LEDs can be lit dynamically by repeating such operations.
As another example, if K9 is pressed, the corresponding key switch is turned on feeding the low level of the scan signal (SCAN6) back to the main PWB via the return signal (KEYIN7). The main PWB locates the position where the line outputting the scan signal and the line inputting the return signal cross, and thereby determines which key switch was operated.

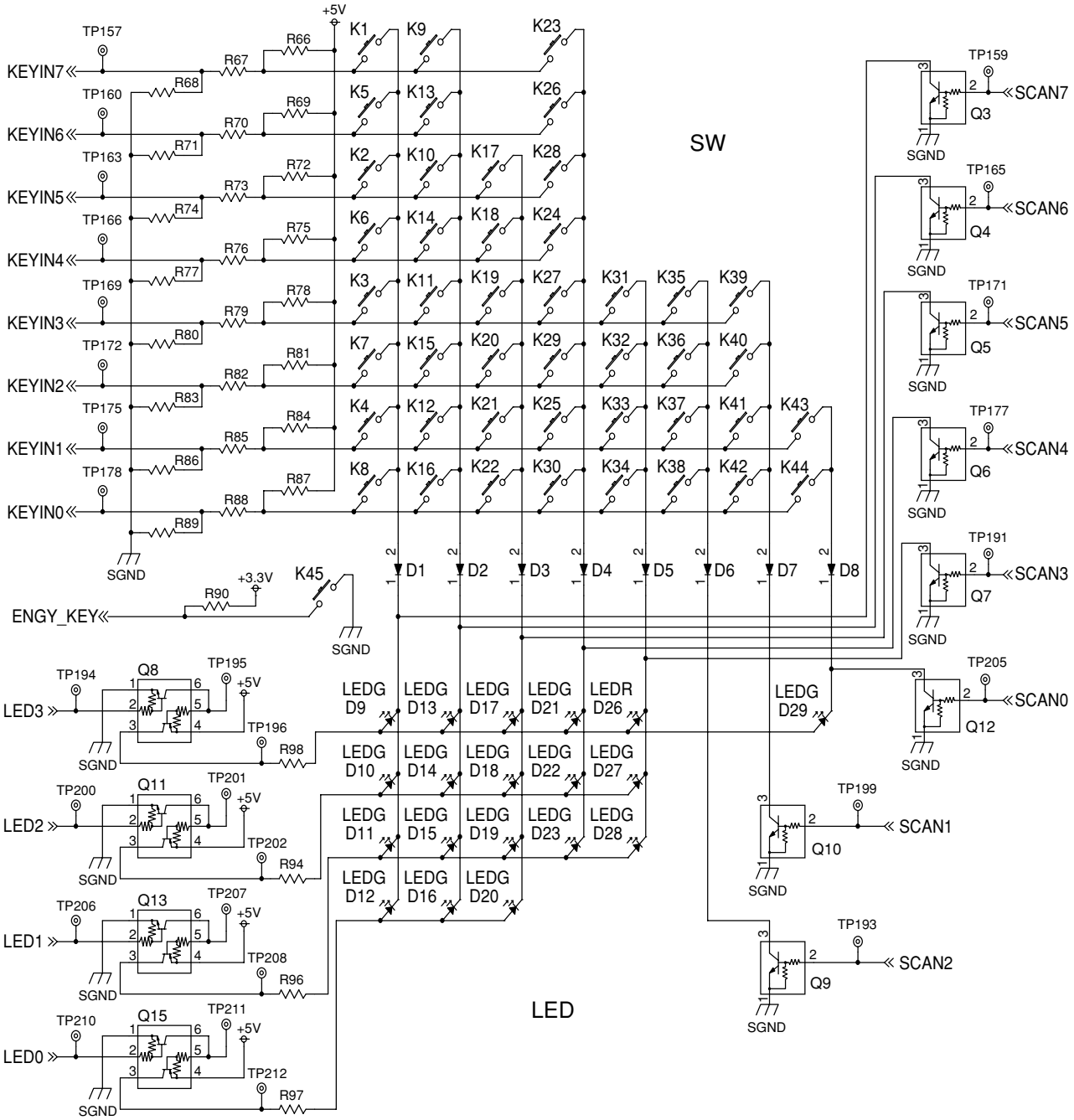

Figure 2-3-18 Operator PWB circuit block diagram

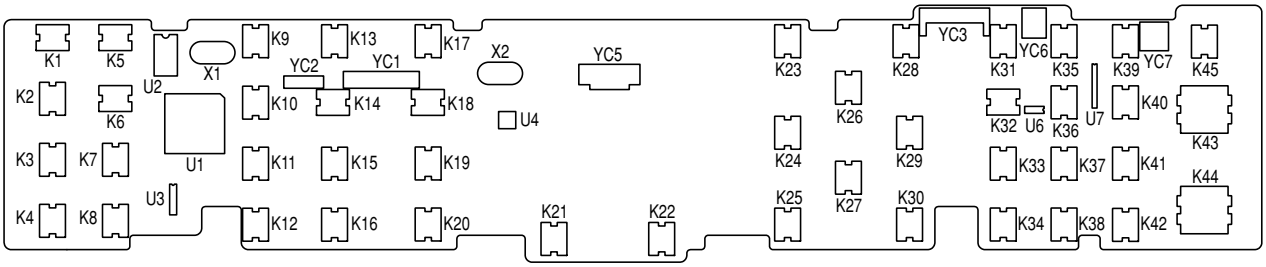

Figure 2-3-19 Operator PWB silk-screen diagram

Connector	Pin No.	Signal	I/O	Description
YC3	1	SGND	-	Ground
Connected to the main PWB	2	AUDIO	I	AUDIO signal
	3	+5 V	I	5 V DC power supply
	4	FPRST	I	FPRST signal
	5	PANTXD	I	PANTXD signal
	6	PANRXD	O	PANRXD signal
	7	PANRTS	I	PANRTS signal
	8	PANCTS	O	PANCTS signal
	9	+3.3 V	I	3.3 V DC power supply
	10	CHECK	I	CHECK signal
	11	TEMP	O	Temperature detection data
YC5	1	SGND	-	Ground
Connected to the LCD	2	V5	O	V5 signal
	3	V4	O	V4 signal
	4	V3	O	V3 signal
	5	V2	O	V2 signal
	6	V1	O	V1 signal
	7	CAP2+	O	CAP2+ signal
	8	CAP2-	O	CAP2- signal
	9	CAP1-	O	CAP1- signal
	10	CAP1+	O	CAP1+ signal
	11	CAP3-	O	CAP3- signal
	12	Vout	-	Ground
	13	Vss	-	Ground
	14	Vdd	O	3.3 V DC power supply
	15	SI	O	SI signal
	16	SCL	O	SCL signal
	17	A0	O	A0 signal
	18	/RES	O	/RES signal
	19	/CS1	O	/CS1 signal
	20	SGND	-	Ground
YC6	1	OUT-	O	OUT- signal
Connected to the speaker	2	OUT+	O	OUT+ signal

2-3-8 Scanner PWB

The scanner PWB consists of scanner driver circuit Q1 to Q5 and exposure lamp driver circuit U1, relays signals from engine PWB, main PWB, operation PWB, CCD PWB and optional document processor.

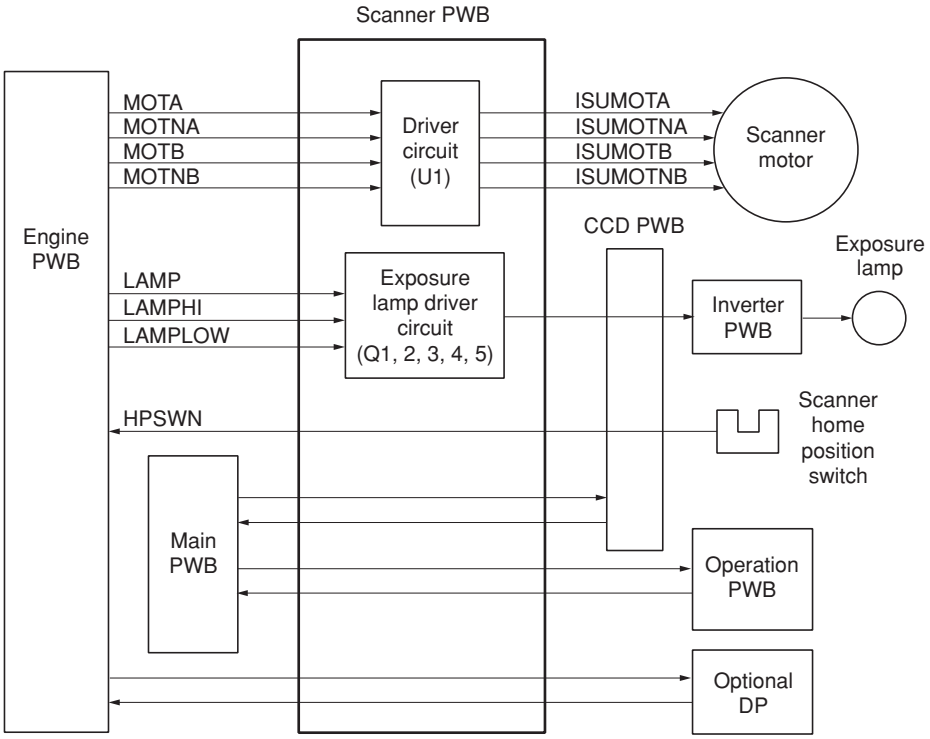

Figure 2-3-20 Scanner PWB circuit block diagram

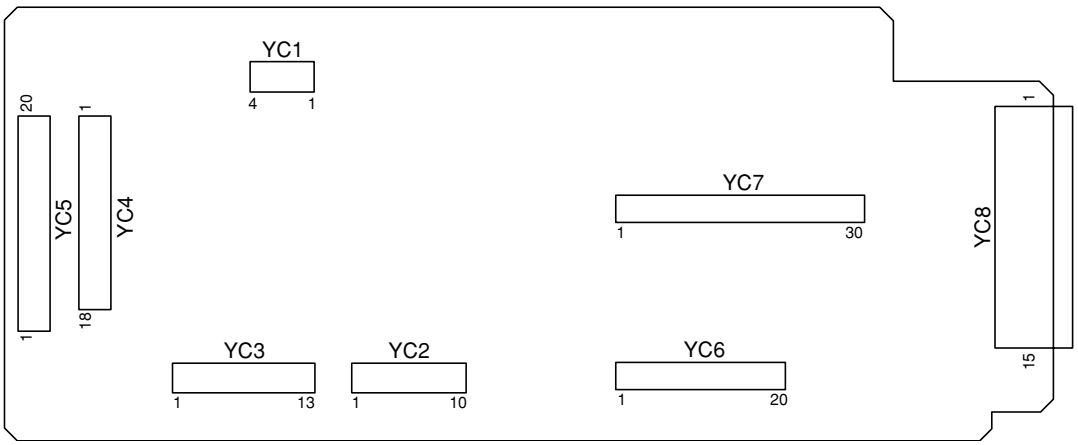

Figure 2-3-21 Scanner PWB silk-screen diagram

Timing chart No. 1 Continuous copying of an A4R/8½" × 11" original onto two sheets of A4R/8½" × 11"R copy paper

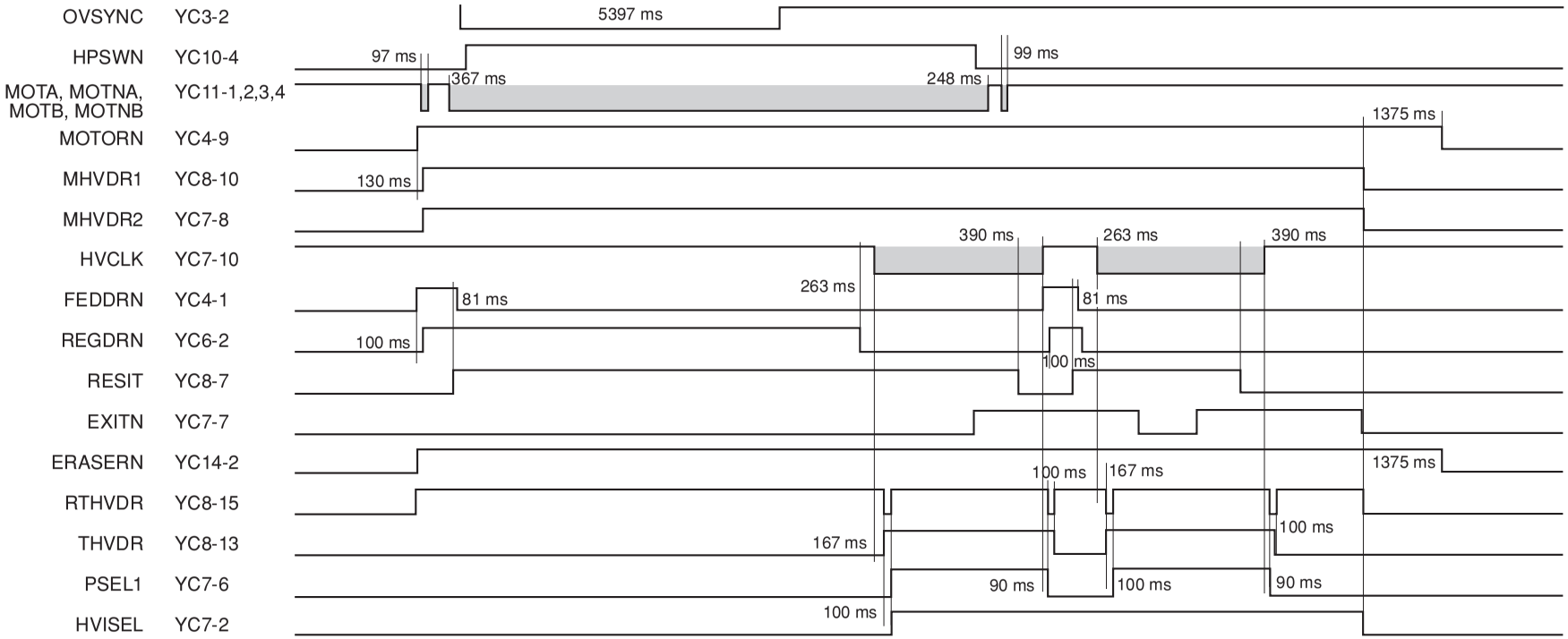

Timing chart No. 2 Continuous copying of an A5R/5$^{1}/_{2}$"×8$^{1}/_{2}$" original onto two sheets of A5R/5$^{1}/_{2}$"×8$^{1}/_{2}$" copy paper

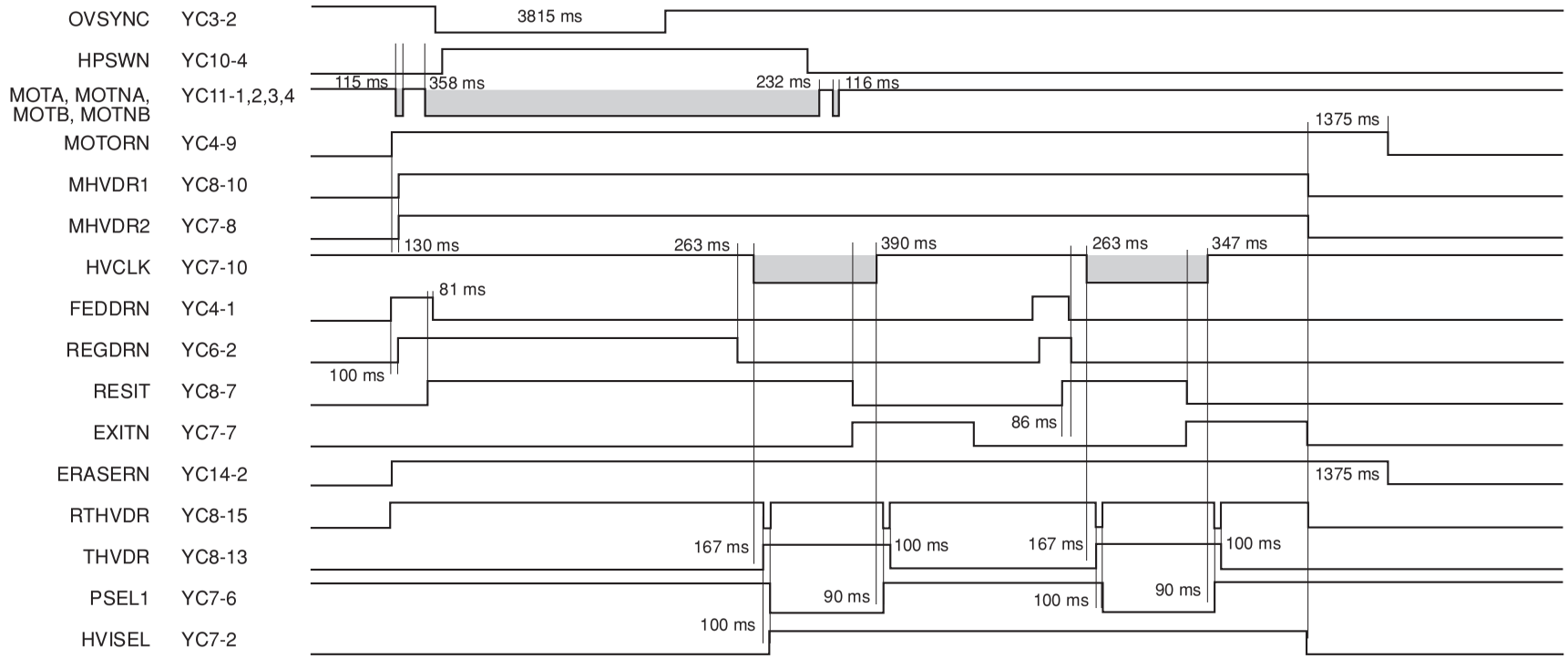

Timing chart No. 3 Continuous copying of an B5R original onto two sheets of B5R copy paper

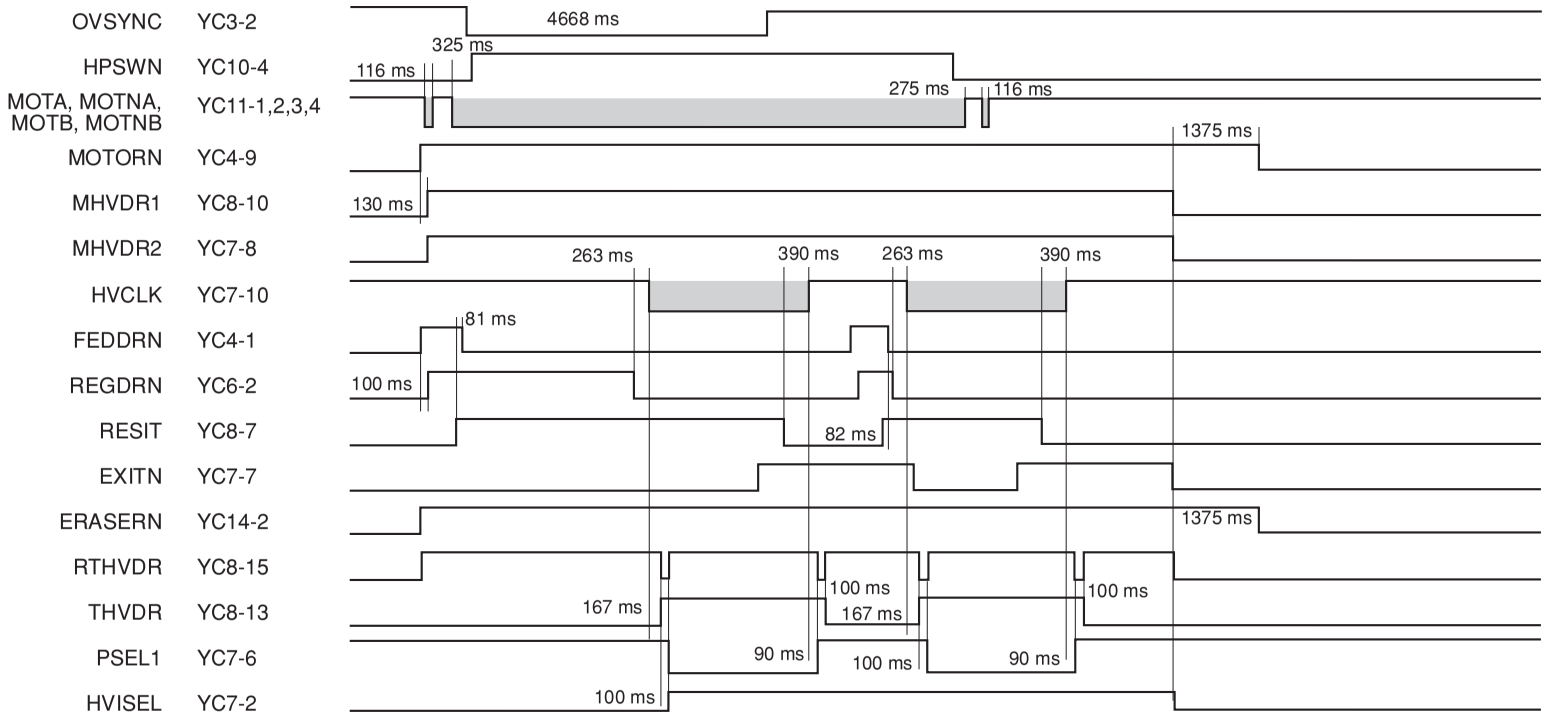

Wiring diagram

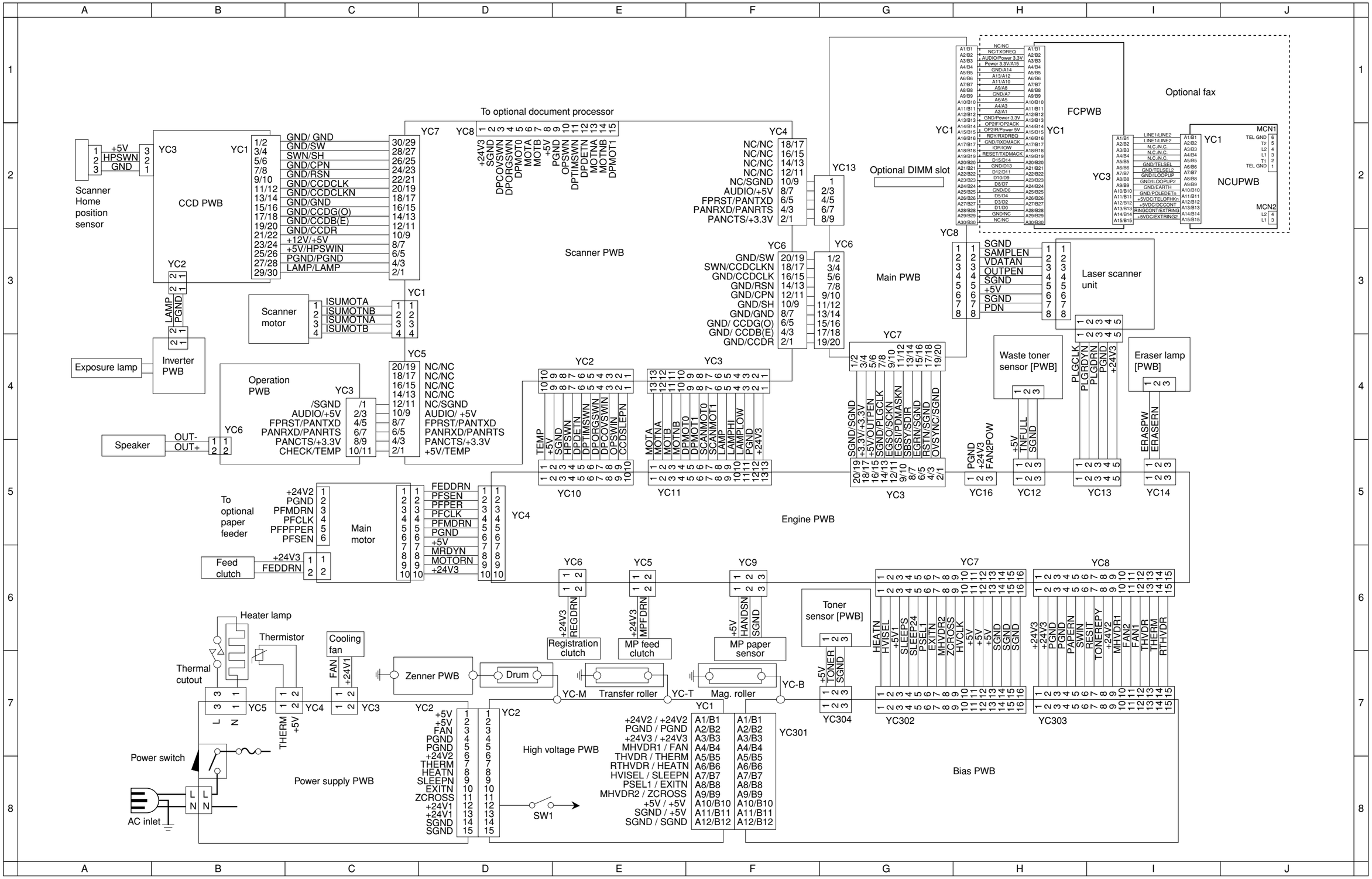

Fax System (K)

SERVICE MANUAL

Published in November 2005
Revivion 3

CAUTION

DANGER OF EXPLOSION IF BATTERY IS INCORRECTLY REPLACED. REPLACE ONLY WITH THE SAME OR EQUIVALENT TYPE RECOMMENDED BY THE MANUFACTURER. DISPOSE OF USED BATTERIES ACCORDING TO THE MANUFACTURER'S INSTRUCTIONS.

ATTENTION

IL Y A DANGER D'EXPLOSION S'IL Y A REMPLACEMENT INCORRECT DE LA BATTERIE. REMPLACER UNIQUEMENT AVEC UNE BATTERIE DU MÊME TYPE OU D'UN TYPE REC-OMMANDÉ PAR LE CONSTRUCTEUR. METTRE AU RÉBUT LES BATTERIES USAGÉES CONFORMÉMENT AUX INSTRUCTIONS DU FABRICANT.

Revision history

Revision	Date	Replaced pages	Remarks
2	June 28, 2005	1-2-4, 1-3-25, 1-3-26, 1-3-29	-
3	November 10, 2005	1-3-34, 1-4-3, 1-6-1	-

Safety precautions

This booklet provides safety warnings and precautions for our service personnel to ensure the safety of their customers, their machines as well as themselves during maintenance activities. Service personnel are advised to read this booklet carefully to familiarize themselves with the warnings and precautions described here before engaging in maintenance activities.

Safety warnings and precautions

Various symbols are used to protect our service personnel and customers from physical danger and to prevent damage to their property. These symbols are described below:

⚠**DANGER**: High risk of serious bodily injury or death may result from insufficient attention to or incorrect compliance with warning messages using this symbol.

⚠**WARNING**:Serious bodily injury or death may result from insufficient attention to or incorrect compliance with warning messages using this symbol.

⚠**CAUTION**:Bodily injury or damage to property may result from insufficient attention to or incorrect compliance with warning messages using this symbol.

Symbols

The triangle (△) symbol indicates a warning including danger and caution. The specific point of attention is shown inside the symbol.

General warning.

Warning of risk of electric shock.

Warning of high temperature.

⃠ indicates a prohibited action. The specific prohibition is shown inside the symbol.

General prohibited action.

Disassembly prohibited.

● indicates that action is required. The specific action required is shown inside the symbol.

General action required.

Remove the power plug from the wall outlet.

Always ground the copier.

1. Installation Precautions

⚠ WARNING

- Do not use a power supply with a voltage other than that specified. Avoid multiple connections to one outlet: they may cause fire or electric shock. When using an extension cable, always check that it is adequate for the rated current. .....

- Connect the ground wire to a suitable grounding point. Not grounding the copier may cause fire or electric shock. Connecting the earth wire to an object not approved for the purpose may cause explosion or electric shock. Never connect the ground cable to any of the following: gas pipes, lightning rods, ground cables for telephone lines and water pipes or faucets not approved by the proper authorities. .....

⚠ CAUTION:

- Do not place the copier on an infirm or angled surface: the copier may tip over, causing injury. .....

- Do not install the copier in a humid or dusty place. This may cause fire or electric shock. .....

- Do not install the copier near a radiator, heater, other heat source or near flammable material. This may cause fire. .....

- Allow sufficient space around the copier to allow the ventilation grills to keep the machine as cool as possible. Insufficient ventilation may cause heat buildup and poor copying performance. .....

- Always handle the machine by the correct locations when moving it. .....

- Always use anti-toppling and locking devices on copiers so equipped. Failure to do this may cause the copier to move unexpectedly or topple, leading to injury. .....

- Avoid inhaling toner or developer excessively. Protect the eyes. If toner or developer is accidentally ingested, drink a lot of water to dilute it in the stomach and obtain medical attention immediately. If it gets into the eyes, rinse immediately with copious amounts of water and obtain medical attention. .....

- Advice customers that they must always follow the safety warnings and precautions in the copier's instruction handbook. .....

2. Precautions for Maintenance

⚠WARNING

- Always remove the power plug from the wall outlet before starting machine disassembly. .....
- Always follow the procedures for maintenance described in the service manual and other related brochures. .....
- Under no circumstances attempt to bypass or disable safety features including safety mechanisms and protective circuits. .....
- Always use parts having the correct specifications. .....
- Always use the thermostat or thermal fuse specified in the service manual or other related brochure when replacing them. Using a piece of wire, for example, could lead to fire or other serious accident. .....
- When the service manual or other serious brochure specifies a distance or gap for installation of a part, always use the correct scale and measure carefully. .....
- Always check that the copier is correctly connected to an outlet with a ground connection. .....
- Check that the power cable covering is free of damage. Check that the power plug is dust-free. If it is dirty, clean it to remove the risk of fire or electric shock. .....
- Never attempt to disassemble the optical unit in machines using lasers. Leaking laser light may damage eyesight. .....
- Handle the charger sections with care. They are charged to high potentials and may cause electric shock if handled improperly. .....

⚠CAUTION

- Wear safe clothing. If wearing loose clothing or accessories such as ties, make sure they are safely secured so they will not be caught in rotating sections. .....
- Use utmost caution when working on a powered machine. Keep away from chains and belts. .....
- Handle the fixing section with care to avoid burns as it can be extremely hot. .....
- Check that the fixing unit thermistor, heat and press rollers are clean. Dirt on them can cause abnormally high temperatures. .....
- Do not remove the ozone filter, if any, from the copier except for routine replacement. .....

- Do not pull on the AC power cord or connector wires on high-voltage components when removing them; always hold the plug itself. .....

- Do not route the power cable where it may be stood on or trapped. If necessary, protect it with a cable cover or other appropriate item. .....

- Treat the ends of the wire carefully when installing a new charger wire to avoid electric leaks. .....

- Remove toner completely from electronic components. .....

- Run wire harnesses carefully so that wires will not be trapped or damaged. .....

- After maintenance, always check that all the parts, screws, connectors and wires that were removed, have been refitted correctly. Special attention should be paid to any forgotten connector, trapped wire and missing screws. .....

- Check that all the caution labels that should be present on the machine according to the instruction handbook are clean and not peeling. Replace with new ones if necessary. .....

- Handle greases and solvents with care by following the instructions below: .....
  - · Use only a small amount of solvent at a time, being careful not to spill. Wipe spills off completely.
  - · Ventilate the room well while using grease or solvents.
  - · Allow applied solvents to evaporate completely before refitting the covers or turning the main switch on.
  - · Always wash hands afterwards.

- Never dispose of toner or toner bottles in fire. Toner may cause sparks when exposed directly to fire in a furnace, etc. .....

- Should smoke be seen coming from the copier, remove the power plug from the wall outlet immediately. .....

3. Miscellaneous

WARNING

- Never attempt to heat the drum or expose it to any organic solvents such as alcohol, other than the specified refiner; it may generate toxic gas. .....

CONTENTS

1-1 Specifications

1-1-1 Specifications 1-1-1
1-1-2 Parts names 1-1-4
(1) Main body 1-1-4
(2) Operation panel 1-1-5
1-1-3 Mechanical construction 1-1-6

1-2 Installation

1-2-1 Unpacking and installation 1-2-1
(1) Unpacking and installation 1-2-1

1-3 Maintenance Mode

1-3-1 Maintenance mode 1-3-1
(1) Executing a maintenance item 1-3-1
(2) Maintenance mode item list 1-3-2
(3) Contents of maintenance mode items 1-3-4
1-3-2 System settings 1-3-27
(1) Executing a system setting item 1-3-27
(2) Report 1-3-28
(3) Date/Timer setting 1-3-28
(4) Common setting 1-3-28
(5) FAX setting 1-3-28
(6) Document box setting 1-3-30
(7) Edit address book 1-3-30
1-3-3 Service settings 1-3-32
(1) Executing a service setting item 1-3-32
(2) Contents of service setting items 1-3-33

1-4 Error Code

1-4-1 Error codes 1-4-1
(1) Error code 1-4-1
(2) Table of general classification 1-4-2
(2-1) U004XX error code table: Interrupted phase B 1-4-4
(2-2) U006XX error code table: Problems with the unit 1-4-5
(2-3) U008XX error code table: Page transmission error 1-4-5
(2-4) U009XX error code table: Page reception error 1-4-5
(2-5) U010XX error code table: G3 transmission 1-4-6
(2-6) U011XX error code table: G3 reception 1-4-8
(2-7) U017XX error code table: V.34 transmission 1-4-9
(2-8) U018XX error code table: V.34 reception 1-4-9
(2-9) U023XX error code table: Relay command abnormal reception 1-4-9
(2-10) U044XX error code table: Encrypted transmission 1-4-9

1-5 Self Diagnosis

1-5-1 Self-diagnosis 1-5-1
(1) Self diagnostic codes 1-5-1

1-6 Upgrading the firmware

1-6-1 Upgrading the firmware on the fax control PWB 1-6-1

2-1 Electrical Parts Layout

2-1-1 Electrical parts layout 2-1-1

2-2 Operation of the PWBs

2-2-1 Fax control PWB 2-2-1
2-2-2 NCU PWB 2-2-5

1-1-1 Specifications

Type	Optional Fax Kit
Compatibility	Group 3
Line requirement	Subscription telephone line
Transmission speed	Less than 3 seconds (33600 bps, JBIG, ITU-T #1 chart)
Modem speed	33600/31200/28800/26400/24000/21600/19200/16800/14400/12000/9600/7200/4800/2400 bps
Data compression	JBIG/MMR/MR/MH
Error correction	ECM
Document dimensions	120 V specifications 8 1/2" × 11", 8 1/2" × 14", 5 1/2" × 8 1/2" 220-240 V specifications A4R, B5R, A5R, Folio, Custom (80 to 216 × 148 to 356 mm)
Paper dimensions	120 V specifications 8 1/2" × 11", 8 1/2" × 14", 5 1/2" × 8 1/2" 220-240 V specifications A4R, A5R, Folio
Auxiliary scanning line density	Horizontal × Vertical Normal (8 dots/mm × 3.85 lines/mm) Fine (8 dots/mm × 7.7 lines/mm) Super fine (8 dots/mm × 15.4 lines/mm) Ultra fine (16 dots/mm × 15.4 lines/mm)
Recording resolution	600 dpi × 600 dpi
Grayscale	256 levels (Value differential diffusion)
One-Touch dial	Max. 8 destinations (1-8)
Broadcast transmission	Max. 100 destinations
Polling reception	Max. 1 location
Imaging memory	3.5 MB
Functions	See pages 1-1-2 to 1-1-3.

Reception functions	Manual reception Automatic reception Fax/telephone auto selection TAD reception D.R.D. reception*1 Remote switching
Transmission functions	One-touch dialing*2 Program*2 Chain dialing*2 Redialing (manual/automatic)
Communication functions	Direct feed transmission Memory transmission Direct reception Memory reception (subaddress-based confidential reception)
Additional communication functions	Broadcast transmission (up to 100 numbers) Polling communication Encrypted communication Password check communication Memory fax forwarding Reserved transmission Timer transmission Interrupt transmission Short protocol ECM Subaddress transmission Subaddress-based confidential reception Subaddress-based bulletin board communication
Supplementary communication functions	Send to and printing out from subaddress confidential box Manual transmission Telephone directory Canceling communication Transmission destination display Tone transmission Communication result display
Supplementary transmission functions	Batch transmission TTI transmission Bulletin board Initial communication speed setting Line type setting*1
Supplementary reception functions	Memory reception 2-in-1 reception Auto reduce reception Rotation reception Recording paper feed setting (paper type) Reception date and time recording Bulk fax output

Reports	Communication management report Transmission report Reception report Status page Subaddress box list Network status page
Others	Memory editing Remote diagnosis Smoothing reception Fax priority printout Network fax functions

*1: For 120 V specifications only.
*2: To be registered under one-touch keys. Up to 8 one-touch keys can be used for one-touch dialing, program and chain dialing.

1-1-2 Parts names

(1) Main body

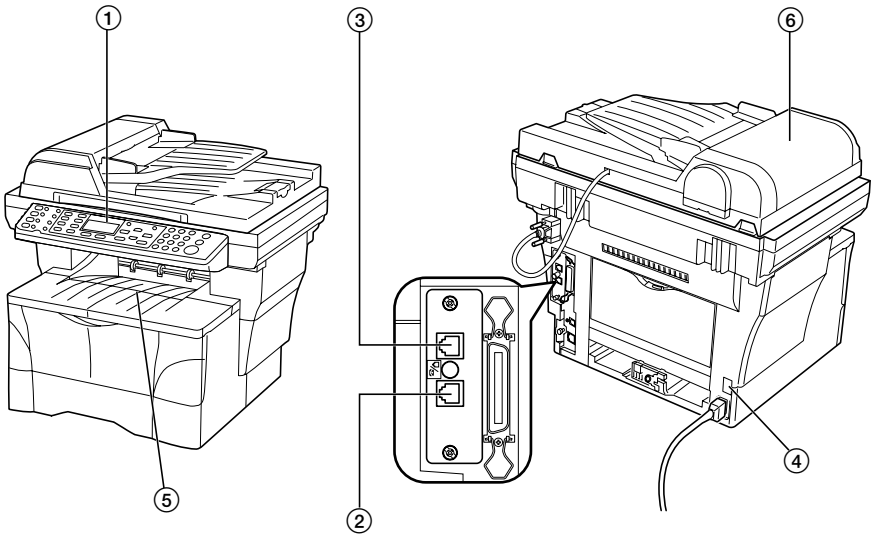

Figure 1-1-1

① Operation panel
② Telephone jack
③ Line jack
④ Power switch
⑤ Output tray
⑥ Optional document processor

(2) Operation panel

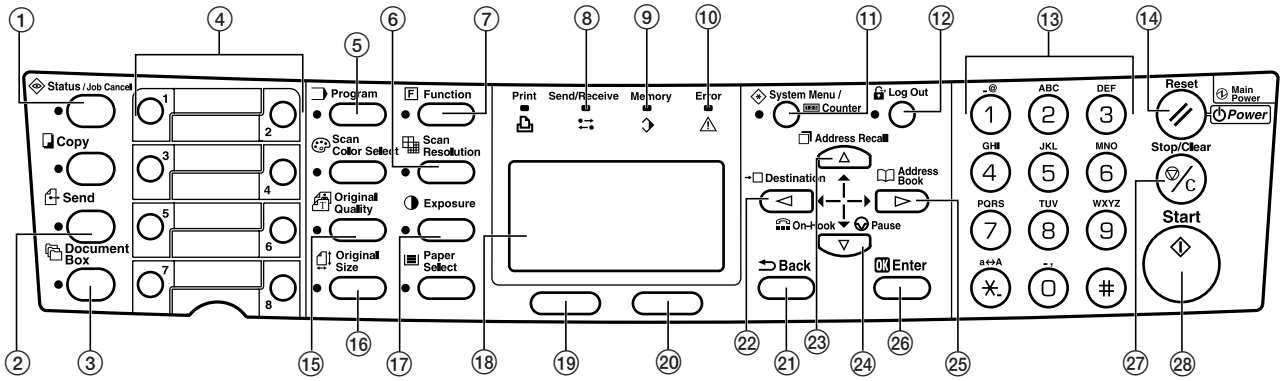

Figure 1-1-2

① Status/Job cancel key and indicator
② Send key and indicator
③ Document box key and indicator
④ One-touch keys (1 to 8)
⑤ Program key and indicator
⑥ Scan resolution key and indicator
⑦ Function key and indicator
⑧ Send/receive indicator
⑨ Memory indicator
⑩ Error indicator
⑪ System menu/counter key and indicator
⑫ Log out key and indicator
⑬ Numeric keys
⑭ Reset/power key
⑮ Original quality key and indicator
⑯ Original size key and indicator
⑰ Exposure key and indicator
⑱ Message display
⑲ Left select key
⑳ Right select key
㉑ Back key
㉒ Left cursor key (Destination key)
㉓ Up cursor key (Address recall key)
㉔ Down cursor key (On-hook/Pause key)
㉕ Right cursor key (Address book key)
㉖ Enter Key
㉗ Stop/clear key
㉘ Start key and indicator

1-1-3 Mechanical construction

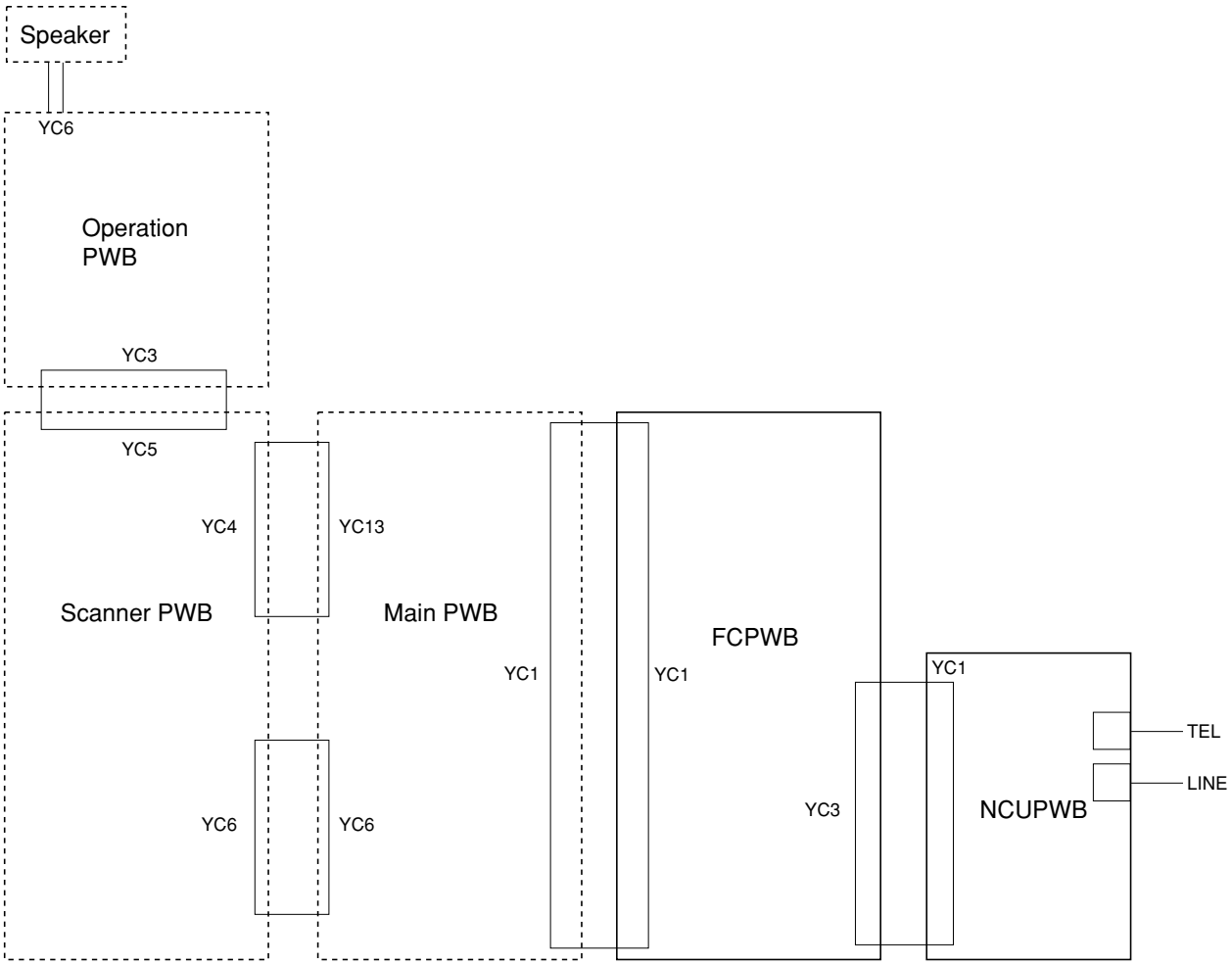

Figure 1-1-3

The fax system consists of the fax control PWB (FCPWB) and NCU PWB (NCUPWB).

1-2-1 Unpacking and installation

(1) Unpacking and installation

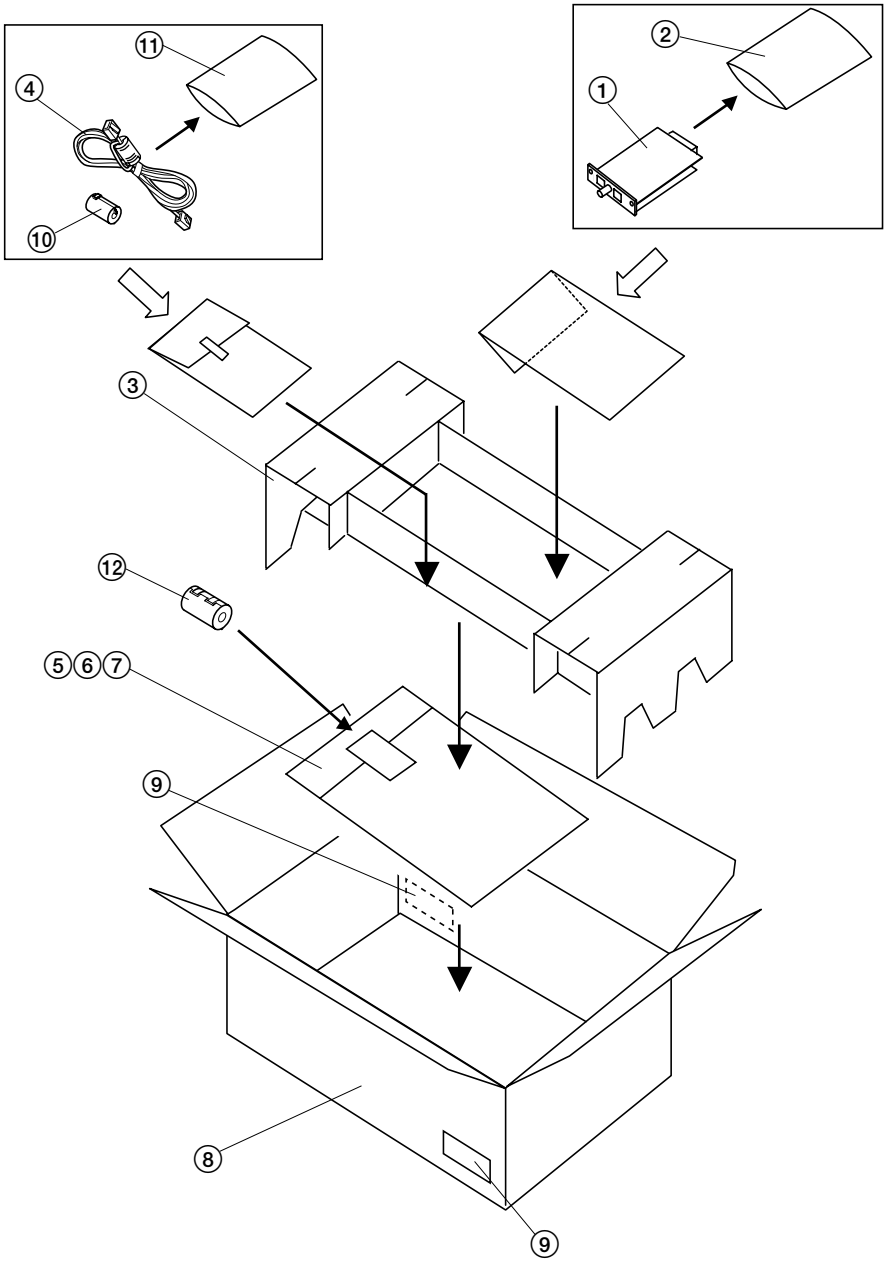

Figure 1-2-1 Unpacking

① Fax assembly
② Antistatic air-padded bag
③ Spacer
④ Modular cord*1
⑤ Installation guide
⑥ Operation guide*1
⑦ Plastic bag
⑧ Outer case
⑨ Barcode labels
⑩ Ferrite core*1
⑪ Plastic bag*1
⑫ Core*2

*1: 120 V specifications only.
*2: 220-240 V specifications only.

Turn the machine's power switch to OFF and unplug the machine from the power supply before installing the fax system.

Precautions for handling the FAX assembly
The FAX assembly is delivered in an antistatic air-padded bag.
To prevent any damage, briefly touch a large metal object to ensure discharge of static electricity before removing the FAX assembly from the bag.

Hold the FAX assembly by the metal plate on front as shown.
Do not touch the circuits or electronic components on the PWB.

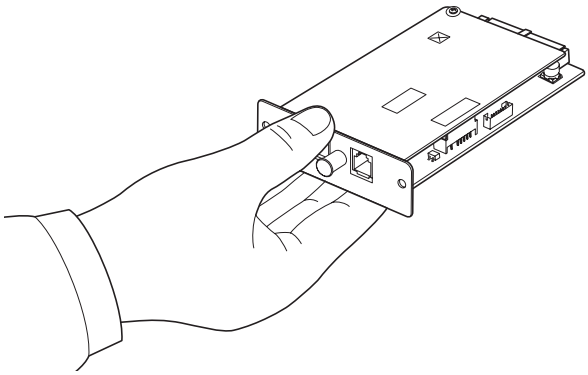

Figure 1-2-2

Procedure

1. On the rear of the machine, remove two screws and then remove the plate.

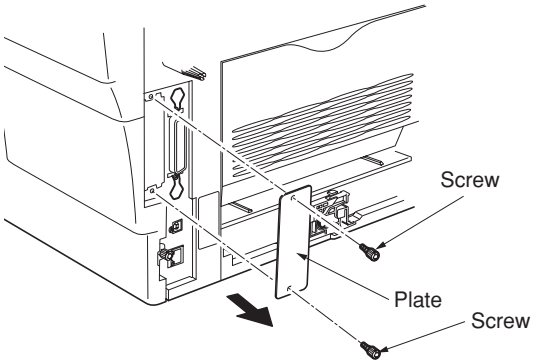

Figure 1-2-3

2. Insert the FAX assembly along the rail in the machine until it clicks in place. Attach the fax assembly using two screws from step 1.
IMPORTANT: When inserting the FAX assembly, slide it slowly and firmly all the way in.

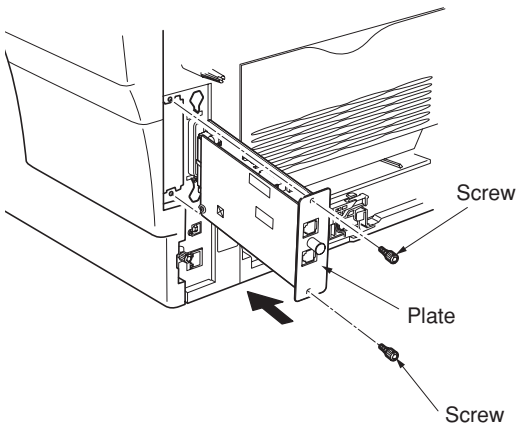

Figure 1-2-4

3. Connect the modular cord to the line jack.
   120 V specifications: Connect the provided modular cord which the ferrite core is attached into the machine.

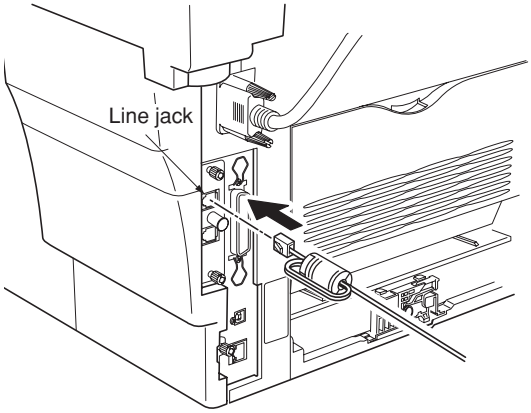

Figure 1-2-5

220-240 V specifications only

4. Attach the core to the power cord of the machine so that the stopper section is located near the power plug as shown in the illustration.

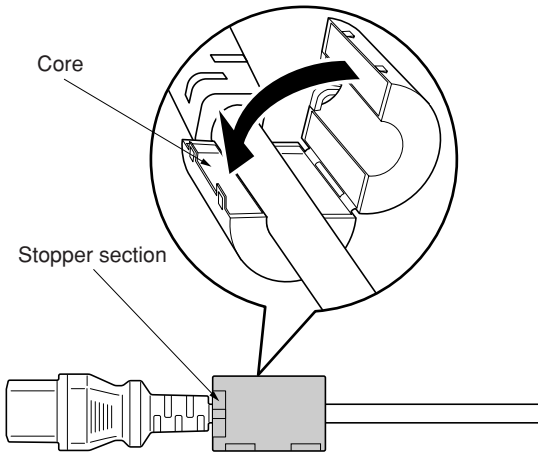

Figure 1-2-6

5. Plug the power cord into the machine. Turn the machine on.
   NOTE (120 V specifications only)
   When connecting a phone to the machine, attach the ferrite core to the modular cord before connection. Loop the modular cord through the ferrite core twice.

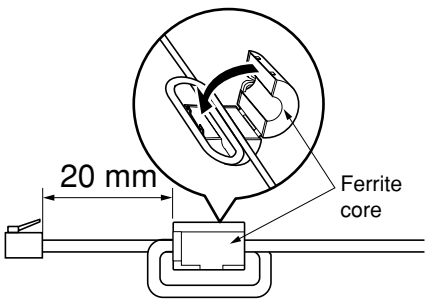

Figure 1-2-7

Initialization procedure after installation of facsimile system

1. Insert the machine power plug to the wall outlet and turn the power switch on.
2. Run maintenance item U600.
3. Select Execute using up/down cursor keys and press the enter key.
4. Enter a destination code using the numeric keys (refer to the destination code list) and then press the enter key.
   * Enter a destination code with three digits.

Code	Destination	Code	Destination	Code	Destination
000	Japan	159	South Africa	253	Sweden
009	Australia	169	Thailand		France
080	Hong Kong	181	U.S.A.		Austria
084	Indonesia	242	South America		Switzerland
088	Israel	243	Saudi Arabia		Belgium
108	Malaysia	253	CTR21 (European nations)		Denmark
126	New Zealand		Italy		Finland
136	Peru		Germany		Portugal
137	Philippines		Spain		Ireland
152	Middle East		U.K.		Norway
156	Singapore		Netherlands	254	Taiwan

5. Enter the OEM code (000) and then press the enter key.
6. After data initialization, the entered destination, OEM codes and ROM version are displayed. A ROM version displays three kinds, application, IPL, and boot.

```
Ini. All data
COMPLETED XXX 000
APLI:****************
BOOT:****************
IPL:****************
```

Figure 1-2-8

7. After completing the installation, run a communications test to confirm that the fax system is working correctly.

1-3-1 Maintenance mode

The machine is equipped with a maintenance function which can be used to maintain and service the machine.

(1) Executing a maintenance item

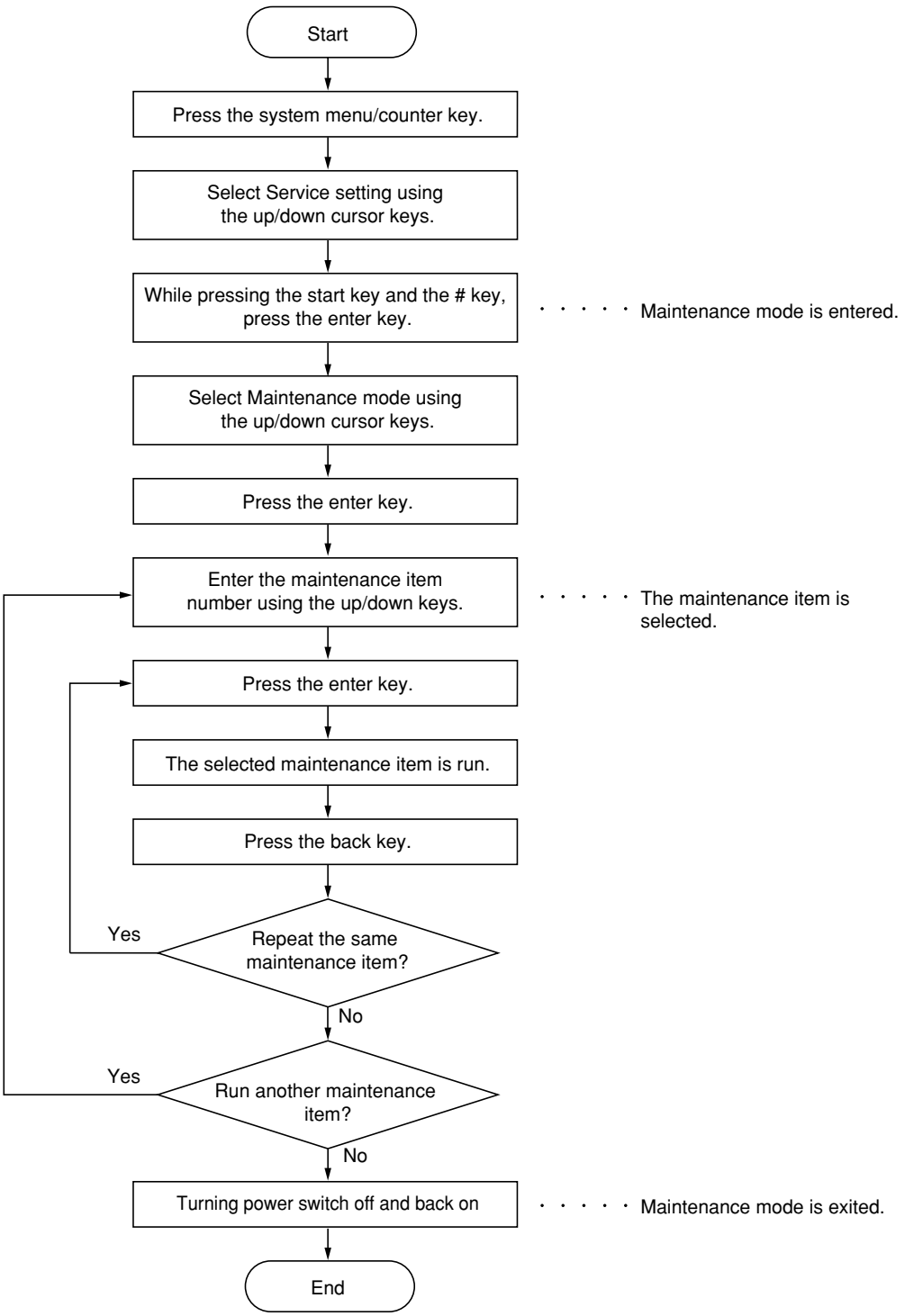

(2) Maintenance mode item list

Section	Item No.	Maintenance item contents	Initial setting*
Fax	U600	Initializing all data	—
	U601	Initializing permanent data	—
	U603	Setting user data 1	—
	U604	Setting user data 2	—
	U605	Clearing data	—
	U610	Setting system 1 • Setting the number of lines to be ignored when receiving a fax at 100% magnification • Setting the number of lines to be ignored when receiving a fax in the auto reduction mode • Setting the number of lines to be ignored when receiving a fax (A4R, 8 1/2 x 11) in the auto reduction mode	 3 3 3
	U611	Setting system 2 • Setting the number of adjustment lines for automatic reduction • Setting the number of adjustment lines for automatic reduction when A4 paper is set • Setting the number of adjustment lines for automatic reduction when letter size paper is set	 7 22 26
	U612	Setting system 3 • Selecting if auto reduction in the auxiliary direction is to be performed • Setting the automatic printing of the protocol list	 — —
	U620	Setting the communication system	—
	U625	Setting the trasmission system • Setting the auto redialing interval • Setting the number of times of auto redialing	 — —
	U630	Setting communication control 1 • Setting the communication starting speed • Setting the reception speed • Setting the waiting period to prevent echo problems at the sender • Setting the waiting period to prevent echo problems at the receiver	 — — — —
	U631	Setting communication control 2 • Setting ECM transmission • Setting ECM reception • Setting the frequency of the CED signal	 — — —
	U632	Setting communication control 3 • Setting the DIS signal to 4 bytes • Setting the short protocol transmission • Setting the reception of a short protocol transmission • Setting the CNG detection times in the fax/telephone auto select mode	 — — — —
	U633	Setting communication control 4 • Enabling/disabling V.34 communication • Setting the V.34 symbol speed (3429 Hz) • Setting the number of times of DIS signal reception • Setting the reference for RTN signal output	 — — — —
	U634	Setting communication control 5	
	U640	Setting communication time 1 • Setting the one-shot detection time for remote switching • Setting the continuous detection time for remote switching	 — —
	U641	Setting communication time • Setting the T0 time-out time • Setting the T1 time-out time • Setting the T2 time-out time • Setting the Ta time-out time • Setting the Tb1 time-out time • Setting the Tb2 time-out time • Setting the Tc time-out time • Setting the Td time-out time	 — — 69 30 20 80 60 —

Section	Item No.	Maintenance item contents	Initial setting
Fax	U650	Setting modem 1 • Setting the G3 transmission cable equalizer • Setting the G3 reception cable equalizer • Setting the modem detection level	 — — —
	U651	Setting modem 2 • Setting the modem output level • Setting the DTMF (high-frequency group) output level • Setting the DTMF (low-frequency group) output level	 — — —
	U660	Setting the NCU • Setting the connection to PBX/PSTN • Setting PSTN dial tone detection • Setting busy tone detection • Setting for a PBX	 — — — —
	U670	Outputting lists • Settings list • Action list • Own-status report • Protocol list • Error list	 — — — — —
	U680	Transmission modem output	—
	U681	V.34 test mode	—
	U682	Tonal test mode	—
	U683	DTMF signal test mode	—
	U684	Board test mode	—
	U685	Relay test mode	—
	U690	10 pps dial test mode	—
	U691	20 pps dial test mode	—
	U692	DTMF dial test mode	—
	U693	Transmission time test mode	—
	U699	Setting the software switches	—

(3) Contents of maintenance mode items

Maintenance item No.	Description
U600	**Initializing all data** **Description** Initializes software switches and all data in the backup data on the fax control PWB, according to the destination and OEM. Executes the check of the file system, when abnormality of the file system is detected, initializes the file system, communication past record and register setting contents. **Purpose** To initialize the fax control PWB. **Method** 1. Press the enter key. 2. Select Execute using up/down cursor keys. 3. Press the enter key. The screen for entering the destination code is displayed. Enter a destination code using the numeric keys (refer to the destination code list on page 1-3-4 for the destination code). Ini. All data COUNTRY CODE:000 4. Press the enter key. The screen for entering the OEM code is displayed. There is no operation necessary on this screen. Ini. All data OEM CODE:000 5. Press the enter key. Data initialization starts. To cancel data initialization, press the back key. 6. After data initialization, the entered destination, OEM codes and ROM version are displayed. A ROM version displays three kinds, application, IPL, and boot. Ini. All data COMPLETED 000 000 APLI:********** BOOT:********** IPL:**********

Maintenance item No.	Description
U600 (cont.)	**Destination code list**

Code	Destination	Code	Destination	Code	Destination
000	Japan	159	South Africa	253	Sweden
009	Australia	169	Thailand		France
080	Hong Kong	181	U.S.A.		Austria
084	Indonesia	242	South America		Switzerland
088	Israel	243	Saudi Arabia		Belgium
108	Malaysia	253	CTR21 (European nations)		Denmark
126	New Zealand		Italy		Finland
136	Peru		Germany		Portugal
137	Philippines		Spain		Ireland
152	Middle East		U.K.		Norway
156	Singapore		Netherlands	254	Taiwan

U601

Initializing permanent data

Description

Initializes software switches on the fax control PWB according to the destination and OEM.

Purpose

To initialize the fax control PWB without changing user registration data.

Method

1. Press the enter key. The screen for selecting an item is displayed.
2. Select Execute using the up/down cursor keys.
3. Press the enter key. The screen for entering the destination code is displayed.
   Enter a destination code using the numeric keys (refer to the destination code list on page 1-3-5 for the destination code).

```
Ini. Keep data
COUNTRY  CODE:000
```

4. Press the enter key. The screen for entering the OEM code is displayed.
   There is no operation necessary on this screen.

```
Ini. Keep data
OEM  CODE:000
```

5. Press the enter key. Data initialization starts. To cancel data initialization, press the back key.
6. After data initialization, the entered destination, OEM codes and ROM version are displayed. A ROM version displays three kinds, application, IPL, and boot.

```
Ini. Keep data
COMPLETED  000  000
APLI:****************
BOOT:****************
IPL:****************
```

<table>
<tr><th>Maintenance item No.</th><th>Description</th></tr>
<tr><td>U603</td><td>
Setting user data 1
Description
Makes user settings to enable the use of the MFP as a fax.
Purpose
To be run after installation of the facsimile kit if necessary.
Method
1. Press the enter key.
2. Change the setting using the cursor up/down keys.
<table>
<tr><th>Display</th><th>Description</th></tr>
<tr><td>1: DTMF
2: 10
3: 20</td><td>DTMF
10 PPS
20 PPS</td></tr>
</table>
3. Press the enter key. The value is set.
Completion
Press the back key. The screen for selecting a maintenance item No. is displayed.
</td></tr>
<tr><td>U604</td><td>
Setting user data 2
Description
Makes user settings to enable the use of the MFP as a fax.
Purpose
Use this if the user wishes to adjust the number of rings that occur before the unit switches into fax receiving mode when fax/telephone auto-select is enabled.
Method
1. Press the enter key.
2. Change the setting using the left/right cursor keys.
<table>
<tr><th>Description</th><th>Setting range</th></tr>
<tr><td>Number of fax/telephone rings</td><td>0 to 15</td></tr>
</table>
If you set this to 0, the unit will start fax reception without any ringing.
3. Press the enter key. The value is set.
Completion
Press the back key. The screen for selecting a maintenance item No. is displayed.
</td></tr>
<tr><td>U605</td><td>
Clearing data
Description
Initializes data related to the fax transmission such as transmission history.
Purpose
To clear the transmission history or image data.
Method
1. Press the enter key. The screen for executing is displayed.
<table>
<tr><th>Display</th><th>Description</th></tr>
<tr><td>1:CLEAR COM. REC</td><td>Clears the activity report, error list, action list, transmission history of each department as listed on the department control report, transmission history for displaying the transmission results, document number, timer program information, protocol list, and other transmission history such as image data, excluding items regarding the machine variation adjustment.</td></tr>
</table>
2. Press the enter key. Initialization processing starts. When processing is finished, the screen for selecting a maintenance item No. is displayed.
Completion
Press the back key at the screen for selecting an item. The screen for selecting a maintenance item No. is displayed.
</td></tr>
</table>

Maintenance item No.	Description
U610	**Setting system 1**

Description

Makes settings for fax reception regarding the sizes of the fax paper and received images and automatic printing of the protocol list.

Start

1. Press the enter key. The screen for selecting an item is displayed.
2. Select the item to be set using the up/down cursor keys.

Display	Description
1:CUT LINE (100%)	Sets the number of lines to be ignored when receiving a fax at 100% magnification.
2:CUT LINE (AUTO)	Sets the number of lines to be ignored when receiving a fax in the auto reduction mode.
3:CUT LINE (A4)	Sets the number of lines to be ignored when receiving a fax (A4R, letter) in the auto reduction mode.

Setting the number of lines to be ignored when receiving a fax at 100% magnification

Sets the maximum number of lines to be ignored if the received data volume exceeds the recording capacity when recording the data at 100% magnification. If the number of excess lines is below the setting, those lines are ignored. If over the setting, they are recorded on the next page.

1. Change the setting using the left/right cursor keys.

Description	Setting range	Initial setting	Change in value per step
Number of lines to be ignored when receiving at 100%	0 to 22	3	16 lines

Increase the setting if a blank second page is output, and decrease it if the received image does not include the entire transmitted data.

2. Press the enter key. The value is set.

Setting the number of lines to be ignored when receiving a fax in the auto reduction mode

Sets the maximum number of lines to be ignored if the received data volume exceeds the recording capacity when the data is recorded in the auto reduction mode. If the number of excess lines is below the setting, those lines are ignored. If over the setting, the entire data on a page is further reduced so that it can be recorded on the same page.

1. Change the setting using the left/right cursor keys.

Description	Setting range	Initial setting	Change in value per step
Number of lines to be ignored when receiving in the auto reduction mode	0 to 22	3	16 lines

Increase the setting if a page received in the reduction mode is over-reduced and too much trailing edge margin is left. Decrease it if the received image does not include all transmitted data.

2. Press the enter key. The value is set.

Setting the number of lines to be ignored when receiving a fax (A4R, 8 1/2 x 11) in the auto reduction mode

Sets the maximum number of lines to be ignored if the received data volume exceeds the recording capacity when the data is recorded in the auto reduction mode onto A4R or 8 1/2 x 11 paper under the conditions below. If the number of excess lines is below the setting, those lines are ignored. If over the setting, the entire data on a page is further reduced so that it can be recorded on the same page.

• With A4R present and folio absent in the drawers
• With letter-size paper present and legal-size paper absent in the drawers

1. Change the setting using the left/right cursor keys.

Description	Setting range	Initial setting	Change in value per step
Number of lines to be ignored when receiving a fax (A4R, letter) in the auto reduction mode	0 to 22	3	16 lines

Maintenance item No.	Description
U610 (cont.)	Increase the setting if a page received in the reduction mode is over-reduced and too much trailing edge margin is left. Decrease it if the received image does not include all transmitted data. 2. Press the enter key. The value is set. **Completion** Press the back key. The screen for selecting a maintenance item No. is displayed.
U611	**Setting system 2** **Description** Sets the number of adjustment lines for automatic reduction. **Start** 1. Press the enter key. 2. Select the item to be set using the up/down cursor keys. **Display** / **Description** 1: ADJ LINES — Sets the number of adjustment lines for automatic reduction. 2: ADJ LINES (A4) — Sets the number of adjustment lines for automatic reduction when A4 paper is set. 3: ADJ LINES (LT) — Sets the number of adjustment lines for automatic reduction when letter size paper is set. **Setting the number of adjustment lines for automatic reduction** Sets the number of adjustment lines for automatic reduction. 1. Change the setting using the left/right cursor keys. **Description** / **Setting range** / **Initial setting** Number of adjustment lines for automatic reduction / 0 to 22 / 7 2. Press the enter key. The value is set. **Setting the number of adjustment lines for automatic reduction when A4 paper is set** Sets the number of adjustment lines for automatic reduction when A4 paper is set. 1. Change the setting using the left/right cursor keys. **Description** / **Setting range** / **Initial setting** Number of adjustment lines for automatic reduction when A4 paper is set / 0 to 22 / 22 2. Press the enter key. The value is set. **Setting the number of adjustment lines for automatic reduction when letter size paper is set** Sets the number of adjustment lines for automatic reduction when letter size paper is set. 1. Change the setting using the left/right cursor keys. **Description** / **Setting range** / **Initial setting** Number of adjustment lines for automatic reduction when letter size paper is set / 0 to 26 / 26 2. Press the enter key. The value is set. **Completion** Press the back key. The screen for selecting a maintenance item No. is displayed.

Maintenance item No.	Description
U612	**Setting system 3**

Description

Makes settings for fax transmission regarding operation and automatic printing of the protocol list.

Start

1. Press the enter key. The screen for selecting an item is displayed.
2. Select the item to be set using the up/down cursor keys.
3. Press the enter key. The screen for the selected item appears.

Display	Description
1:AUTO REDU	Selects if auto reduction in the auxiliary directionis to be performed.
2:PROTOCOL LIST	Sets the automatic printing of the protocol list.

Selecting if auto reduction in the auxiliary direction is to be performed

Sets whether to receive a long document by automatically reducing it in the auxiliary direction or at 100% magnification.

1. Change the setting using the up/down cursor keys.

Display	Description
1: ON	Auto reduction is performed if the received document is longer than the fax paper.
2: OFF	Auto reduction is not performed.

2. Press the enter key. The value is set.
3. To return to the screen for selecting an item, press the back key.

Setting the automatic printing of the protocol list

Sets if the protocol list is automatically printed out.

1. Change the setting using the up/down cursor keys.

Display	Description
1: OFF	The protocol list is not printed out automatically.
2: ERROR	The protocol list is automatically printed out after communication only if a communication error occurs.
3: ON	The protocol list is automatically printed out after communication.

2. Press the enter key. The value is set.
3. To return to the screen for selecting an item, press the back key.

Completion

Press the back key at the screen for selecting an item. The screen for selecting a maintenance item No. is displayed.

Maintenance item No.	Description
U620	**Setting the communication system** **Description** Sets the signal detection method for remote switching. Be sure to change the setting according to the type of telephone connected to the machine. **Method** 1. Press the enter key. The screen for selecting an item is displayed. 2. Press the enter key. 3. Change the setting using the up/down cursor keys. **Display** / **Description** 1: ONE — One-shot detection 2: CONT — Continuous detection 4. Press the enter key. The value is set. 5. To return to the screen for selecting an item, press the back key. **Completion** Press the back key at the screen for selecting an item. The screen for selecting a maintenance item No. is displayed.
U625	**Setting the trasmission system** **Description** Makes settings for the auto redialing interval and the number of times of auto redialing. **Purpose** Change the setting to prevent the following problems: fax transmission is not possible due to too short redial interval, or fax transmission takes too much time to complete due to too long redial interval. **Start** 1. Press the enter key. 2. Select the item to be set using the up/down cursor keys. **Display** / **Description** 1:INTERVAL — Sets the auto redialing interval. 2:TIMES — Sets the number of times of auto redialing. **Setting the auto redialing interval** 1. Change the setting using the left/right cursor keys. **Description** / **Setting range** Redialing interval — 1 to 9 (min.) 2. Press the enter key. The value is set. **Setting the number of times of auto redialing** 1. Change the setting using the left/right cursor keys. **Description** / **Setting range** Number of redialing — 0 to 9 When set to 0, no redialing is performed. 2. Press the enter key. The value is set. **Completion** Press the back key. The screen for selecting a maintenance item No. is displayed.

Maintenance item No.	Description
U630	**Setting communication control 1**

Description

Makes settings for fax transmission regarding the communication.

Start

1. Press the enter key. The screen for selecting an item is displayed.
2. Select the item to be set using the up/down cursor keys.
3. Press the enter key. The screen for the selected item appears.

Display	Description
1:TX SPEED	Sets the communication starting speed.
2:RX SPEED	Sets the reception speed.
3:TX ECHO	Sets the waiting period to prevent echo problems at the sender.
4:RX ECHO	Sets the waiting period to prevent echo problems at the receiver.

Setting the communication starting speed

Sets the initial communication speed when starting transmission. When the destination unit has V.34 capability, V.34 is selected for transmission, regardless of this setting.

1. Change the setting using the up/down cursor keys.

Display	Description
1: 14400bps/V17	V.17, 14400 bps
2: 9600bps/V29	V.29, 9600 bps
3: 4800bps/V27ter	V.27ter, 4800 bps
4: 2400bps/V27ter	V.27ter, 2400 bps

2. Press the enter key. The value is set.
3. To return to the screen for selecting an item, press the back key.

Setting the reception speed

Sets the reception speed that the sender is informed of using the DIS or NSF signal. When the destination unit has V.34 capability, V.34 is selected, regardless of the setting.

1. Change the setting using the up/down cursor keys.

Display	Description
1: 14400bps	V.17, V.33, V.29, V.27ter
2: 9600bps	V.29, V.27ter
3: 4800bps	V.27ter
4: 2400bps	V.27ter (fallback only)

2. Press the enter key. The value is set.
3. To return to the screen for selecting an item, press the back key.

Setting the waiting period to prevent echo problems at the sender

Sets the period before a DCS signal is sent after a DIS signal is received. Used when problems occur due to echoes at the sender.

1. Change the setting using the up/down cursor keys.

Display	Description
1: 500	Sends a DCS 500 ms after receiving a DIS.
2: 300	Sends a DCS 300 ms after receiving a DIS.

2. Press the enter key. The value is set.
3. To return to the screen for selecting an item, press the back key.

Maintenance item No.	Description
U630 (cont.)	**Setting the waiting period to prevent echo problems at the receiver** Sets the period before an NSF, CSI or DIS signal is sent after a CED signal is received. Used when problems occur due to echoes at the receiver. 1. Change the setting using the up/down cursor keys. 2. Press the enter key. The value is set. 3. To return to the screen for selecting an item, press the back key. **Completion** Press the back key at the screen for selecting an item. The screen for selecting a maintenance item No. is displayed.

Display	Description
1: 500	Sends an NSF, CSI or DIS 500 ms after receiving a CED.
2: 75	Sends an NSF, CSI or DIS 75 ms after receiving a CED.

Maintenance item No.	Description
U631	**Setting communication control 2**

Description

Makes settings regarding fax transmission.

Start

1. Press the enter key. The screen for selecting an item is displayed.
2. Select the item to be set using the up/down cursor keys.
3. Press the enter key. The screen for the selected item appears.

Display	Description
1:ECM TX 2:ECM RX 3:CED FREQ.	Sets ECM transmission. Sets ECM reception. Sets the frequency of the CED signal.

Setting ECM transmission

To be set to OFF when reduction of transmission costs is of higher priority than image quality.

1. Change the setting using the up/down cursor keys.

Display	Description
1: ON 2: OFF	ECM transmission is enabled. ECM transmission is disabled.

2. Press the enter key. The value is set.
3. To return to the screen for selecting an item, press the back key.

Setting ECM reception

To be set to OFF when reduction of transmission costs is of higher priority than image quality.

1. Change the setting using the up/down cursor keys.

Display	Description
1: ON 2: OFF	ECM reception is enabled. ECM reception is disabled.

2. Press the enter key. The value is set.
3. To return to the screen for selecting an item, press the back key.

Setting the frequency of the CED signal

Sets the frequency of the CED signal. Used as one of the measures to improve transmission performance for international communications.

1. Change the setting using the up/down cursor keys.

Display	Frequency of the CED signal
1: 2100 2: 1100	2100 Hz 1100 Hz

2. Press the enter key. The value is set.
3. To return to the screen for selecting an item, press the back key.

Completion

Press the back key at the screen for selecting an item. The screen for selecting a maintenance item No. is displayed.

Maintenance item No.	Description
U632	**Setting communication control 3** **Description** Makes settings for fax transmission regarding the communication. **Start** 1. Press the enter key. The screen for selecting an item is displayed. 2. Select the item to be set using the up/down cursor keys. 3. Press the enter key. The screen for the selected item appears. **Display** / **Description** 1:DIS 4BYTE — Sets the DIS signal to 4 bytes. 2:SHORT PROTO TX — Sets the short protocol transmission. 3:SHORT PROTO RX — Sets the reception of short protocol transmission. 4:NUM OF CNG (F/T) — Sets the CNG detection times in the fax/telephone auto select mode. **Setting the DIS signal to 4 bytes** Sets if bit 33 and later bits of the DIS/DTC signal are sent. 1. Change the setting using the up/down cursor keys. **Display** / **Description** 1: ON — Bit 33 and later bits of the DIS/DTC signal are not sent. 2: OFF — Bit 33 and later bits of the DIS/DTC signal are sent. 2. Press the enter key. The value is set. 3. To return to the screen for selecting an item, press the back key. **Setting the short protocol transmission** Sets if short protocol transmission is performed. 1. Change the setting using the up/down cursor keys. **Display** / **Description** 1: ON — Short protocol transmission is performed. 2: OFF — Short protocol transmission is not performed. 2. Press the enter key. The value is set. 3. To return to the screen for selecting an item, press the back key. **Setting the reception of a short protocol transmission** Selects whether to receive or ignore transmission using short protocol. If a short protocol transmission is received when an auto switching device is attached to the machine, communication problems, including auto switching inability, sometimes occur. Change the setting to ignore short protocol transmission to prevent such problems. 1. Change the setting using the up/down cursor keys. **Display** / **Description** 1: ON — Receives short protocol transmission. 2: OFF — Ignores short protocol transmission. 2. Press the enter key. The value is set. 3. To return to the screen for selecting an item, press the back key. **Setting the CNG detection times in the fax/telephone auto select mode** Sets the CNG detection times in the fax/telephone auto select mode. 1. Change the setting using the up/down cursor keys. **Display** / **Description** 1: 1 TIME — Detects CNG once. 2: 2 TIMES — Detects CNG twice. 2. Press the enter key. The value is set. 3. To return to the screen for selecting an item, press the back key. **Completion** Press the back key at the screen for selecting an item. The screen for selecting a maintenance item No. is displayed.

Maintenance item No.	Description
U633	**Setting communication control 4**

Description
Makes settings for fax transmission regarding the communication.

Purpose
To reduce transmission errors when a low quality line is used.

Start
1. Press the enter key. The screen for selecting an item is displayed.
2. Select the item to be set using the up/down cursor keys.
3. Press the enter key. The screen for the selected item appears.

Display	Description
1:V.34	Enables or disables V.34 communication.
2:V.34-3429Hz	Sets the V.34 symbol speed (3429 Hz).
3:DIS 2RES	Sets the number of times of DIS signal reception.
4:RTN CHECK	Sets the reference for RTN signal output.

Enabling/disabling V.34 communication
Sets whether V.34 communication is enabled/disabled for transmission and reception.
1. Change the setting using the cursor up/down keys.

Display	Description
1: ON	V.34 communication is enabled for both transmission and reception.
2: TX	V.34 communication is enabled for transmission only.
3: RX	V.34 communication is enabled for reception only.
4: OFF	V.34 communication is disabled for both transmission and reception.

2. Press the enter key. The value is set.
3. To return to the screen for selecting an item, press the back key.

Setting the V.34 symbol speed (3429 Hz)
Sets if the V.34 symbol speed 3429 Hz is used.
1. Change the setting using the cursor up/down keys.

Display	Description
1: ON	V.34 symbol speed 3429 Hz is used.
2: OFF	V.34 symbol speed 3429 Hz is not used.

2. Press the enter key. The value is set.
3. To return to the screen for selecting an item, press the back key.

Setting the number of times of DIS signal reception
Sets the number of times to receive the DIS signal to once or twice. Used as one of the correction measures for transmission errors and other problems.
1. Change the setting using the cursor up/down keys.

Display	Description
1: ONCE	Responds to the first signal.
2: TWICE	Responds to the second signal.

2. Press the enter key. The value is set.
3. To return to the screen for selecting an item, press the back key.

Setting the reference for RTN signal output
Sets the error line rate as the reference for RTN signal output. If transmission errors occur frequently due to the quality of the line, they can be reduced by lowering this setting.
1. Change the setting using the cursor up/down keys.

Display	Description
1: 5%	Error line rate of 5%
2: 10%	Error line rate of 10%
3: 15%	Error line rate of 15%
4: 20%	Error line rate of 20%

2. Press the enter key. The value is set.
3. To return to the screen for selecting an item, press the back key.

<table>
<tr><th>Maintenance item No.</th><th>Description</th></tr>
<tr><td>U633 (cont.)</td><td>Completion
Press the back key at the screen for selecting an item. The screen for selecting a maintenance item No. is displayed.</td></tr>
<tr><td>U634</td><td>Setting communication control 5
Description
Sets the maximum number of error bytes judged acceptable when receiving a TCF signal. Used as a measure to ease transmission conditions if transmission errors occur.
Method
1. Press the enter key.
2. Change the setting using the left/right cursor keys.
<table>
<tr><th>Description</th><th>Setting range</th></tr>
<tr><td>Number of allowed error bytes when detecting TCF</td><td>0 to 255</td></tr>
</table>
3. Press the enter key. The value is set.
Completion
Press the back key. The screen for selecting a maintenance item No. is displayed.</td></tr>
<tr><td>U640</td><td>Setting communication time 1
Description
Sets the detection time when one-shot detection is selected for remote switching. (This setting item will be displayed, but the setting made is ineffective.)
Sets the detection time when continuous detection is selected for remote switching. (This setting item will be displayed, but the setting made is ineffective.)
Method
1. Press the enter key.
2. Select the item to be set using the up/down cursor keys.
<table>
<tr><th>Display</th><th>Description</th><th>Setting range</th></tr>
<tr><td>1:TIME (ONE)
2:TIME (CON)</td><td>Sets the one-shot detection time for remote switching.
Sets the continuous detection time for remote switching.</td><td>0 to 255
0 to 255</td></tr>
</table>
3. Change the setting using the left/right cursor keys.
4. Press the enter key. The value is set.
Completion
Press the back key. The screen for selecting a maintenance item No. is displayed.</td></tr>
</table>

Maintenance item No.	Description
U641	**Setting communication time 2**

Description
Sets the time-out time for fax transmission.

Purpose
Used mainly to improve transmission performance for international communications.

Start
1. Press the enter key.
2. Select the item to be set using the up/down cursor keys.

Display	Description
1:T0 TIME OUT	Sets the T0 time-out time.
2:T1 TIME OUT	Sets the T1 time-out time.
3:T2 TIME OUT	Sets the T2 time-out time.
4:Ta TIME OUT	Sets the Ta time-out time.
5:Tb1 TIME OUT	Sets the Tb1 time-out time.
6:Tb2 TIME OUT	Sets the Tb2 time-out time.
7:Tc TIME OUT	Sets the Tc time-out time.
8:Td TIME OUT	Sets the Td time-out time.

Setting the T0 time-out time
Sets the time before detecting a CED or DIS signal after a dialing signal is sent. Depending on the quality of the exchange, or when the auto select function is selected at the destination unit, a line can be disconnected. Change the setting to prevent this problem.
1. Change the setting using the left/right cursor keys.

Description	Setting range
T0 time-out time	30 to 90 s

2. Press the enter key. The value is set.

Setting the T1 time-out time
Sets the time before receiving the correct signal after call reception. No change is necessary for this maintenance item.
1. Change the setting using the left/right cursor keys.

Description	Setting range
T1 time-out time 3	0 to 90 s

2. Press the enter key. The value is set.

Maintenance item No.	Description
U641 (cont.)	

Setting the T2 time-out time

The T2 time-out time decides the following.

- From CFR signal output to image data reception
- From image data reception to the next signal reception
- In ECM, from RNR signal detection to the next signal reception

1. Change the setting using the left/right cursor keys.

Description	Setting range	Initial setting	Change in value per step
T2 time-out time	1 to 255	69	100 ms

2. Press the enter key. The value is set.

Setting the Ta time-out time

In the fax/telephone auto select mode, sets the time to continue ringing an operator through the connected telephone after receiving a call as a fax machine (see figure 1-3-1). A fax signal is received within the Ta set time, or the fax mode is selected automatically when the time elapses. In fax/telephone auto select mode, change the setting when fax reception is unsuccessful or a telephone fails to receive a call.

1. Change the setting using the left/right cursor keys.

Description	Setting range	Initial setting
Ta time-out time	1 to 255 s	30

2. Press the enter key. The value is set.

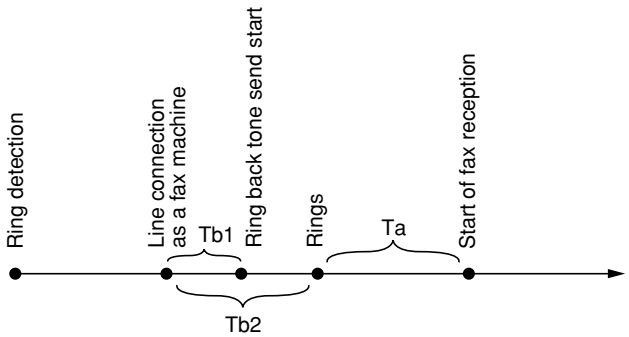

Figure 1-3-1 Ta/Tb1/Tb2 time-out time

Setting the Tb1 time-out time

In the fax/telephone auto select mode, sets the time to start sending the ring back tone after receiving a call as a fax machine (see figure 1-3-1). In fax/telephone auto select mode, change the setting when fax reception is unsuccessful or a telephone fails to receive a call.

1. Change the setting using the left/right cursor keys.

Description	Setting range	Initial setting	Change in value per step
Tb1 time-out time	1 to 255	20	100 ms

2. Press the enter key. The value is set.

Setting the Tb2 time-out time

In the fax/telephone auto select mode, sets the time to start ringing an operator through the connected telephone after receiving a call as a fax machine (see figure 1-3-1). In the fax/telephone auto select mode, change the setting when fax reception is unsuccessful or a telephone fails to receive a call.

1. Change the setting using the left/right cursor keys.

Description	Setting range	Initial setting	Change in value per step
Tb2 time-out time	1 to 255	80	100 ms

2. Press the enter key. The value is set.

Maintenance item No.	Description
U641 (cont.)	**Setting the Tc time-out time** In the TAD mode, set the time to check if there are any triggers for shifting to fax reception after a connected telephone receives a call. Only the telephone function is available if shifting is not made within the set Tc time. In the TAD mode, change the setting when fax reception is unsuccessful or a telephone fails to receive a call. 1. Change the setting using the left/right cursor keys. 2. Press the enter key. The value is set. **Setting the Td time-out time** Sets the length of the time required to determine silent status (fax), one of the triggers for Tc time check. In the TAD mode, change the setting when fax reception is unsuccessful or a telephone fails to receive a call. Be sure not to set it too short; otherwise, the mode may be shifted to fax while the unit is being used as a telephone. 1. Change the setting using the left/right cursor keys. 2. Press the enter key. The value is set. **Completion** Press the back key. The screen for selecting a maintenance item No. is displayed.

Description	Setting range	Initial setting
Tc time-out time	1 to 255 s	60

Description	Setting range
Td time-out time	1 to 255 s

Maintenance item No.	Description
U650	**Setting modem 1**

Description

Sets the G3 cable equalizer.
Sets the modem detection level.

Start

1. Press the enter key. The screen for selecting an item is displayed.
2. Select the item to be set using the up/down cursor keys.
3. Press the enter key. The screen for the selected item appears.

Display	Description
1:REG. G3 TX EQR	Sets the G3 transmission cable equalizer.
2:REG. G3 RX EQR	Sets the G3 reception cable equalizer.
3:RX MODEM LEVEL	Sets the modem detection level.

Setting the G3 transmission cable equalizer

Perform the following adjustment to make the equalizer compatible with the line characteristics.

1. Change the setting using the up/down cursor keys.

Display	Description
1: 0dB	0 km
2: 4dB	4 km
3: 8dB	8 km
4: 12dB	12 km

2. Press the enter key. The value is set.
3. To return to the screen for selecting an item, press the back key.

Setting the G3 reception cable equalizer

Perform the following adjustment to make the equalizer compatible with the line characteristics.

1. Change the setting using the up/down cursor keys.

Display	Description
1: 0dB	0 km
2: 4dB	4 km
3: 8dB	8 km
4: 12dB	12 km

2. Press the enter key. The value is set.
3. To return to the screen for selecting an item, press the back key.

Setting the modem detection level

To improve the transmission performance when a low quality line is used.

1. Change the setting using the up/down cursor keys.

Display	Description
1: 33dBm	–33 dBm
2: 38dBm	–38 dBm
3: 43dBm	–43 dBm
4: 48dBm	–47 dBm

2. Press the enter key. The value is set.
3. To return to the screen for selecting an item, press the back key.

Completion

Press the back key at the screen for selecting an item. The screen for selecting a maintenance item No. is displayed.

Maintenance item No.	Description
U651	**Setting modem 2** **Description** Sets the modem output level. Sets the DTMF output level of a push-button dial telephone. **Purpose** Used if problems occur when sending a signal with a push-button dial telephone. **Start** 1. Press the enter key. 2. Select the item to be set using the up/down cursor keys. 3. Change the setting using the left/right cursor keys. 4. Press the enter key. The value is set. **Completion** Press the back key. The screen for selecting a maintenance item No. is displayed.

Display	Description	Setting range
1:SGL LEVEL MODEM	Modem output level	0 to 15
2:DTMF TX LEVEL (H)	DTMF (high-frequency group) output level	0 to 15
3:DTMF TX LEVEL (L)	DTMF (low-frequency group) output level	0 to 15

Maintenance item No.	Description
U660	**Setting the NCU**

Description
Makes setting regarding the network control unit (NCU).

Purpose
To be set when installing the facsimile kit.

Start
1. Press the enter key. The screen for selecting an item is displayed.
2. Select the item to be set using the up/down cursor keys.
3. Press the enter key. The screen for the selected item appears.

Display	Description
1: EXCHANGE	Sets the connection to PBX/PSTN.
2: DIAL TONE	Sets PSTN dial tone detection.
3: BUSY TONE	Sets busy tone detection.
4: PBX SETTING	Setting for a PBX.
5: DC LOOP	Sets the loop current detection before dialing.

Setting the connection to PBX/PSTN
Selects if a fax is to be connected to either a PBX or public switched telephone network.
1. Change the setting using the up/down cursor keys.

Display	Description
1: PSTN	Connected to the public switched telephone network.
2: PBX	Connected to a PBX.

2. Press the enter key. The value is set.
3. To return to the screen for selecting an item, press the back key.

Setting PSTN dial tone detection
Selects if the dial tone is detected to check the telephone is off the hook when a fax is connected to a public switched telephone network.
1. Change the setting using the up/down cursor keys.

Display	Description
1: ON	Detects the dial tone.
2: OFF	Does not detect the dial tone.

2. Press the enter key. The value is set.
3. To return to the screen for selecting an item, press the back key.

Setting busy tone detection
When a fax signal is sent, sets whether the line is disconnected immediately after a busy tone is detected, or the busy tone is not detected and the line remains connected until T0 time-out time.
Fax transmission may fail due to incorrect busy tone detection. When set to 2, this problem may be prevented. However, the line is not disconnected within the T0 time-out time even if the destination line is busy.
1. Change the setting using the up/down cursor keys.

Display	Description
1: ON	Detects busy tone.
2: OFF	Does not detect busy tone.

2. Press the enter key. The value is set.
3. To return to the screen for selecting an item, press the back key.

<table>
<tr><th>Maintenance item No.</th><th>Description</th></tr>
<tr><td>U660
(cont.)</td><td>
Setting for a PBX
Selects the mode to connect an outside call when connected to a PBX.
According to the type of the PBX connected, select the mode to connect an outside call.
1. Change the setting using the up/down cursor keys.
<table>
<tr><th>Display</th><th>Description</th></tr>
<tr><td>1: EARTH
2: FLASH
3: LOOP</td><td>Earth mode
Flashing mode
Code number mode</td></tr>
</table>
2. Press the enter key. The value is set.
3. To return to the screen for selecting an item, press the back key.
Setting the loop current detection before dialing
Sets if the loop current detection is performed before dialing.
1. Change the setting using the up/down cursor keys.
<table>
<tr><th>Display</th><th>Description</th></tr>
<tr><td>1: ON
2: OFF</td><td>Performs loop current detection before dialing.
Does not perform loop current detection before dialing.</td></tr>
</table>
2. Press the enter key. The value is set.
3. To return to the screen for selecting an item, press the back key.
Completion
Press the back key at the screen for selecting an item. The screen for selecting a maintenance item No. is displayed.
</td></tr>
<tr><td>U670</td><td>
Outputting lists
Description
Outputs a list of data regarding fax transmissions.
Purpose
To check conditions of use, settings and transmission procedures of the fax.
Method
1. Press the enter key.
2. Select the item to be output using the up/down cursor keys.
3. Press the enter key. The selected list is output.
<table>
<tr><th>Display</th><th>Description</th></tr>
<tr><td>1: SETTING LIST</td><td>Outputs a list of software switches, self telephone number, confidential boxes, ROM versions and other information.</td></tr>
<tr><td>2: ACTION LIST</td><td>Outputs a list of error history, transmission line details and other information.</td></tr>
<tr><td>3: SELF ST REPORT</td><td>Outputs a list of settings in maintenance mode (own-status report) regarding fax transmission only.</td></tr>
<tr><td>4: PROTOCOL LIST</td><td>Outputs a list of transmission procedures.</td></tr>
<tr><td>5: ERROR LIST</td><td>Outputs a list of error.</td></tr>
</table>
</td></tr>
</table>

Maintenance item No.	Description
U680	**Transmission modem output** This maintenance item is for a test mode and do not execute.
U681	**V.34 test mode** This maintenance item is for a test mode and do not execute.
U682	**Tonal test mode** This maintenance item is for a test mode and do not execute.
U683	**DTMF signal test mode** This maintenance item is for a test mode and do not execute.
U684	**Board test mode** This maintenance item is for a test mode and do not execute.
U685	**Relay test mode** This maintenance item is for a test mode and do not execute.
U690	**10 pps dial test mode** This maintenance item is for a test mode and do not execute.
U691	**20 pps dial test mode** This maintenance item is for a test mode and do not execute.
U692	**DTMF dial test mode** This maintenance item is for a test mode and do not execute.
U693	**Transmission time test mode** This maintenance item is for a test mode and do not execute.
U699	**Setting the software switches** **Description** Sets the software switches on the fax control PWB individually. **Purpose** Use to change the setting when a problem such as split output of received originals occurs. Since the communication performance is largely affected, normally this setting need not be changed. **Method** 1. Press the enter key. 2. Enter the desired software switch number (3 digits) using the numeric keys and press the enter key. 3. Use numeric keys 7 to 0 to switch each bit between 0 and 1. 4. Press the enter key to set the value. **Completion** Press the back key. The screen for selecting a maintenance item No. is displayed.

Maintenance item No.	Description
U699 (cont.)	**List of Software Switches of Which the Setting Can Be Changed**

<System setting>

No.	Bit	Item
39	21	Declaration of reception size in automatic paper source selection for fax

<Communication control procedure>

No.	Bit	Item
31	2	Automatic reception level adjustment (V. 17)
	1	Automatic reception level adjustment (V. 29)
	0	Automatic reception level adjustment (V. 27ter)
36	7654	Coding format in transmission
	3210	Coding format in reception
37	5	33600 bps/V34
	4	31200 bps/V34
	3	28800 bps/V34
	2	26400 bps/V34
	1	24000 bps/V34
	0	21600 bps/V34
38	7	19200 bps/V34
	6	16800 bps/V34
	5	14400 bps/V34
	4	12000 bps/V34
	3	9600 bps/V34
	2	7200 bps/V34
	1	4800 bps/V34
	0	2400 bps/V34
41	3	FSK detection in V.8
42	2	FIF length in transmission of more than 4 times of DIS/DTC signal
	0	Automatic reception level adjustment (V. 33)
43	76543210	Adjustment width in automatic reception level adjustment

<Communication time setting>

No.	Bit	Item
53	76543210	T3 timeout setting
54	76543210	T4 timeout setting (automatic equipment)
55	76543210	T5 timeout setting
60	76543210	Time before transmission of CNG (1100 Hz) signal
63	76543210	T0 timeout setting (manual equipment)
64	7	Phase C timeout in ECM reception
66	76543210	Timeout 1 in countermeasures against echo
67	76543210	Timeout 2 in countermeasures against echo
68	76543210	Timeout for FSK detection start in V.8

Maintenance item No.	Description
U699 (cont.)	**List of Software Switches of Which the Setting Can Be Changed**

<Modem setting>

No.	Bit	Item
89	76543	RX gain adjust

<NCU setting>

No.	Bit	Item
121	7654	Dial tone/busy tone detection pattern
122	7654	Busy tone detection pattern
	1	Busy tone detection in automatic FAX/TEL switching
125	76543210	Access code registration for connection to PSTN
126	7654	FAX/TEL automatic switching ringback tone ON/OFF cycle
127	10	Pseudo-ringer duty ratio

<Calling time setting>

No.	Bit	Item
133	76543210	DTMF signal transmission time
134	76543210	DTMF signal pause time
141	76543210	Ringer detection cycle (minimum)
142	76543210	Ringer detection cycle (maximum)
143	76543210	Ringer ON time detection
144	76543210	Ringer OFF time detection
145	76543210	Ringer OFF non-detection time
147	76543210	Dial tone detection time (continuous tone)
148	76543210	Allowable dial tone interruption time
149	76543210	Time for transmitting selection signal after closing the DC circuit
151	76543210	Ringer frequency detection invalid time

1-3-2 System settings

In addition to a maintenance function, the machine is equipped with a system settings which can be operated by users (mainly by the machine administrator). In this machine system settings, default settings can be changed.

(1) Executing a system setting item

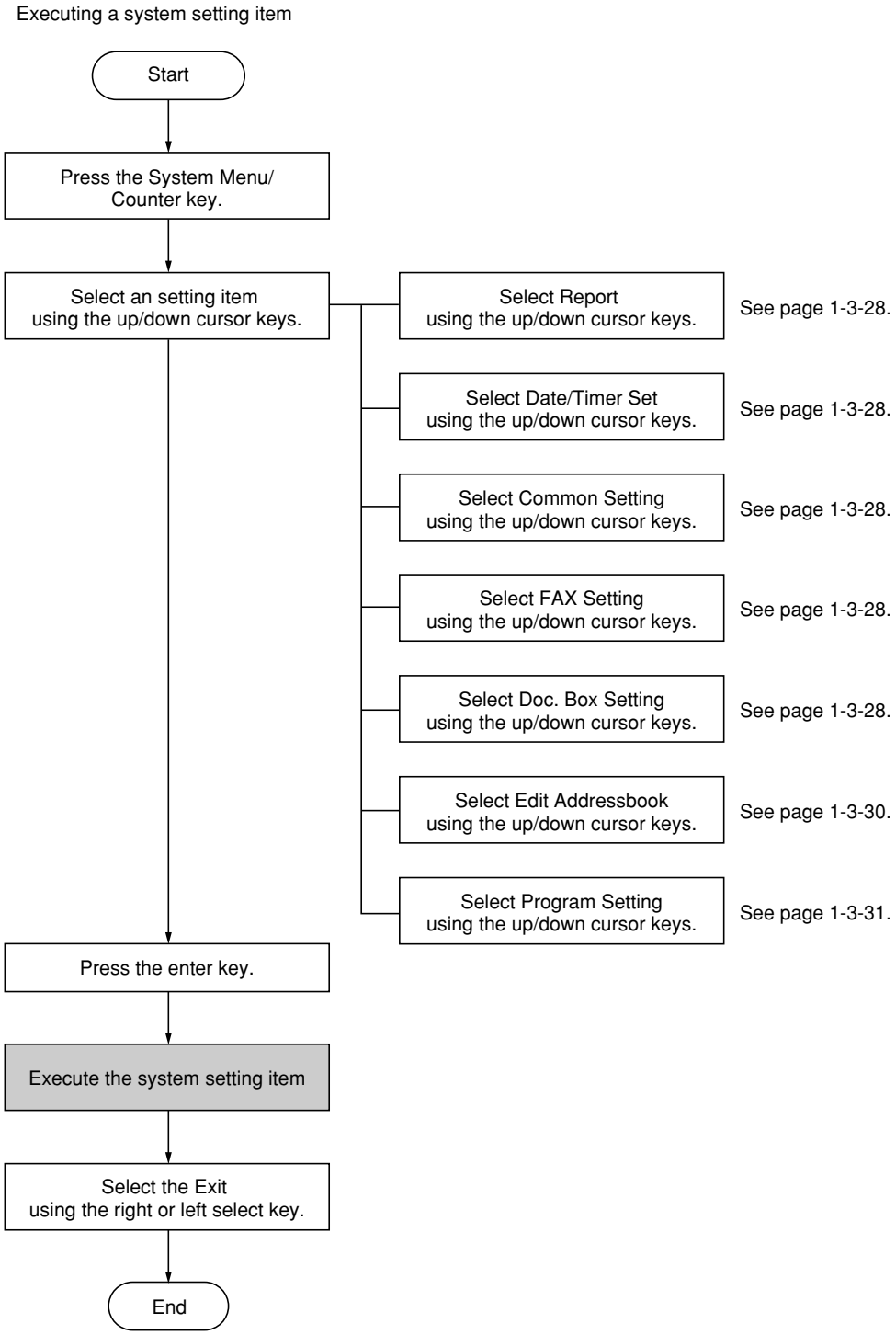

(2) Report

Printing lists of subaddress boxes
Print a list of subaddress boxes.
1. Select Report Print using the up/down cursor keys and press the enter key.
2. Select SubAddr Box List using the up/down cursor keys and press the enter key.
3. Press the left select key to print the list.

Fax TX report and Fax RX report settings
Set up fax transmission and/or reception reporting.
1. Select Report Setting using the up/down cursor keys and press the enter key.
2. Select FAX TX Report or FAX RX Report using the up/down cursor keys and press the enter key.
3. Select On or Off using the up/down cursor keys and press the enter key.

Send result settings
Set up printing of transmission results.
1. Select Result Rep. Set using the up/down cursor keys and press the enter key.
2. Select Send Result using the up/down cursor keys and press the enter key.
3. Select Off, On, or On (Conditions) using the up/down cursor keys and press the enter key.
   *Choose On (Conditions) to print the report of transmission result when an error occurs in transmission.

Fax RX result settings
Set up printing of reception results.
1. Select Result Rep. Set. using the up/down cursor keys and press the enter key.
2. Select FAX RX Result. using the up/down cursor keys and press the enter key.
3. Select Off, On, or On (Conditions) using the up/down cursor keys and press the enter key.
   *Choose On (Conditions) to print the report of reception result when an error occurs in fax reception.
4. Select Report Print or E-mail using the up/down cursor keys and press the enter key.
5. Select Address Entry or Address Book using the up/down cursor keys and press the enter key.

(3) Date/Timer setting
Set the date and time to appear in the message display. Set the time zone before setting the date and time.

Setting the time zone
1. Select Time Zone using the up/down cursor keys and press the enter key.
2. Select the desired time zone using the up/down cursor keys and press the enter key.

Setting date and time
1. Select Year/Time using the up/down cursor keys and press the enter key.
2. Enter the current year using the up/down cursor keys and press the right cursor key.
3. Enter the current month using the up/down cursor keys and press the right cursor key.
4. Enter the current day using the up/down cursor keys and press the enter key.
5. Enter the current hour using the up/down cursor keys and press the right cursor key.
6. Enter the current minute using the up/down cursor keys and press the right cursor key.
7. Enter the current second using the up/down cursor keys and press the enter key.

(4) Common setting
Adjusting speaker levels
Adjust the volume of the built-in speaker in off-hook mode.
1. Select Sound Setting using the up/down cursor keys and press the enter key.
2. Select FAX Speaker using the up/down cursor keys and press the enter key.
3. Select the volume (4 levels) using the up/down cursor keys and press the enter key.

Adjusting the monitor tone volume
Adjust the volume of the built-in speaker during auto-transmission in off-hook mode.
1. Select Sound Setting using the up/down cursor keys and press the enter key.
2. Select FAX Monitor using the up/down cursor keys and press the enter key.
3. Select the volume (4 levels) using the up/down cursor keys and press the enter key.

Setting up one-touch keys
Assign one-touch keys to specific destinations or programs.
1. Select One Touch Set using the up/down cursor keys and press the enter key.
2. Select Program or Destination using the up/down cursor keys and press the enter key.

Assigning destinations
Assign destinations in the address book to one-touch keys.
1. Select One Touch Keys using the up/down cursor keys and press the enter key.
2. Select an unassigned number for a one-touch key using the up/down cursor keys and press the enter key.
3. Select Address Book using the up/down cursor keys and press the enter key.
4. Select the destination party to assign using the up/down cursor keys and press the enter key.
5. Select the destination fax number using the up/down cursor keys and press the enter key.

(5) FAX setting
Registering new encryption keys
1. Select FAX Common Set using the up/down cursor keys and press the enter key.
2. Select Encryption Key using the up/down cursor keys and press the enter key.
3. Select an unassigned number using the up/down cursor keys and press the enter key.
4. Enter the encryption key (16 digits) using the numeric keys and press the enter key.

Configuring TTI settings
Set up printing details for the Transmit Terminal Identifier (TTI).
1. Select FAX TX Setting using the up/down cursor keys and press the enter key.
2. Select TTI using the up/down cursor keys and press the enter key.
3. Select to print or not print TTI information and the position if printed. Press the enter key.

Entering fax information (local information)
Enter identifying information about fax number, station name, and station ID.
Entering the fax number
1. Select FAX TX Setting using the up/down cursor keys and press the enter key.
2. Select Local FAX Number using the up/down cursor keys and press the enter key.
3. Enter the local station number using the numeric keys and press the enter key.

Entering the station name
1. Select FAX TX Setting using the up/down cursor keys and press the enter key.
2. Select Local FAX Name using the up/down cursor keys and press the enter key.
3. Enter the local station name and press the enter key.

Entering the station ID
1. Select FAX TX Setting using the up/down cursor keys and press the enter key.
2. Select Local FAX ID using the up/down cursor keys and press the enter key.
3. Enter a four-digit station ID using the numeric keys and press the enter key.

Selecting the line type (120 V specifications only)
Set the line type corresponding to the telephone service.
1. Select FAX TX Setting using the up/down cursor keys and press the enter key.
2. Select FAX Line Setting using the up/down cursor keys and press the enter key.
3. Select Tone (DTMF) or Pulse (10pps) using the up/down cursor keys and press the enter key.

Redial
Specify the number of redial attempts if the other party's line is busy.
1. Select FAX TX Setting using the up/down cursor keys and press the enter key.
2. Select Retry Times using the up/down cursor keys and press the enter key.
3. Enter the number of redial attempts (0 to 14) using the numeric keys and press the enter key.

Fax media type
Select the paper type used to print received faxes.
1. Select FAX RX Setting using the up/down cursor keys and press the enter key.
2. Select FAX Media Type using the up/down cursor keys and press the enter key.
3. Select the paper type using the up/down cursor keys and press the enter key.

Setting the number of rings (auto fax reception)
Specify the number of rings in auto reception mode.
1. Select FAX RX Setting using the up/down cursor keys and press the enter key.
2. Select Rings (Normal) using the up/down cursor keys and press the enter key.
3. Enter the number of rings (1 to 15) using the up/down cursor keys and press the enter key.

Setting the number of rings (TAD reception)
Specify the number of rings until fax reception begins when the answering machine is off.
1. Select FAX RX Setting using the up/down cursor keys and press the enter key.
2. Select Rings (TAD) using the up/down cursor keys and press the enter key.
3. Enter the number of rings (1 to 15) using the up/down cursor keys and press the enter key.

Setting the number of rings (Fax/Tel switching) (120 V specifications only)
1. Select FAX RX Setting using the up/down cursor keys and press the enter key.
2. Select Rings (FAX/TEL) using the up/down cursor keys and press the enter key.
3. Enter the number of rings (0 to 15) using the up/down cursor keys and press the enter key.

Activating Fax forwarding
Activate fax forwarding.
1. Select FAX RX Setting using the up/down cursor keys and press the enter key.
2. Select Forward Setting using the up/down cursor keys and press the enter key.
3. Select On or Off using the up/down cursor keys and press the enter key.

Fax reception mode setting
Select the fax reception mode.
1. Select FAX RX Setting using the up/down cursor keys and press the enter key.
2. Select RX Setting using the up/down cursor keys and press the enter key.
3. Select a reception mode using the up/down cursor keys and press the enter key.

Reception date and time
Set to print the date and time of reception, sender identification, and the page number.
1. Select FAX RX Setting using the up/down cursor keys and press the enter key.
2. Select RX Date/Time using the up/down cursor keys and press the enter key.
3. Select On or Off using the up/down cursor keys and press the enter key.

2in1 reception
Set to print two $5^1/_2$" x $8^1/_2$"/A5-sized faxes received consecutively on a single 11" x $8^1/_2$"/A4 sheet.
1. Select FAX RX Setting using the up/down cursor keys and press the enter key.
2. Select 2in1 RX using the up/down cursor keys and press the enter key.
3. Select On or Off using the up/down cursor keys and press the enter key.

Bulk printing
Set to print all fax image data together upon completed reception.
1. Select FAX RX Setting using the up/down cursor keys and press the enter key.
2. Select RX Bulk Print using the up/down cursor keys and press the enter key.
3. Select On or Off using the up/down cursor keys and press the enter key.

Changing the remote switching number
Change the remote switching number (the default value is 55).
1. Select FAX RX Setting using the up/down cursor keys and press the enter key.
2. Select Remote SW Dial using the up/down cursor keys and press the enter key.
3. Enter the new remote switching number (2 digits) using the numeric keys and press the enter key.

Registering new authorized telephone numbers
Register authorized telephone numbers.
1. Select FAX RX Setting using the up/down cursor keys and press the enter key.
2. Select TX/RX Restrict using the up/down cursor keys and press the enter key.
3. Select Permit No. List using the up/down cursor keys and press the enter key.
4. Press right select key.
5. Select Add FAX Number using the up/down cursor keys and press the enter key.
6. Enter the authorized fax number using the numeric keys.

Registering new authorized Ids
Register authorized ID numbers.
1. Select FAX RX Setting using the up/down cursor keys and press the enter key.
2. Select TX/RX Restrict using the up/down cursor keys and press the enter key.
3. Select Permit ID List using the up/down cursor keys and press the enter key.
4. Press right select key.
5. Select Add FAX ID using the up/down cursor keys and press the enter key.
6. Enter the ID number using the numeric keys and press the enter key.

Activating password-based communications
Activate to restrict transmission or reception to authorized users.
1. Select FAX RX Setting using the up/down cursor keys and press the enter key.
2. Select TX/RX Restrict using the up/down cursor keys and press the enter key.
3. Select TX Restriction using the up/down cursor keys and press the enter key.
4. Select Use Permit List or Off using the up/down cursor keys and press the enter key.
5. Select RX Restriction using the up/down cursor keys and press the enter key.
6. Select Use Permit List or Off using the up/down cursor keys and press the enter key.

Setting Up Encrypted Reception
To receive encrypted transmissions, complete the encrypted reception setting and specify the encryption key.
1. Select FAX RX Setting using the up/down cursor keys and press the enter key.
2. Select Encryption RX using the up/down cursor keys and press the enter key.
3. Select On using the up/down cursor keys and press the enter key.
4. Select the encryption key ID using the up/down cursor keys and press the enter key.

(6) Document box setting
Paper setting for printing from boxes
Specify the paper type for jobs from the subaddress box.
1. Select Box Media Type using the up/down cursor keys and press the enter key.
2. Select the paper type using the up/down cursor keys and press the enter key.

Setting up subaddress boxes
Register new subaddress boxes.
1. Select Sub Address Box using the up/down cursor keys and press the enter key.
2. Press the right select key.
3. Select Add Box using the up/down cursor keys and press the enter key.
4. Enter the subaddress of the box and press the enter key.
5. Enter the box name and press the enter key.
6. Enter the box number using the numeric keys.
7. Select Exit using the up/down cursor keys and press the enter key.

Polling transmission settings
Set the system to continue storing the documents stored for polling transmission or to delete them after polling.
1. Select Polling Setting using the up/down cursor keys and press the enter key.
2. Select Remain File or Delete File using the up/down cursor keys and press the enter key.

(7) Edit address book
Entering destinations in the address book
Enter fax recipients in the address book.
1. Press the right select key.
2. Select Add Address using the up/down cursor keys and press the enter key.
3. Select Contact using the up/down cursor keys and press the enter key.
4. Display Contact Name using the up/down cursor keys and press right select key.
5. Enter the destination name and press the enter key.
6. Display FAX Number using the up/down cursor keys and press right select key.
7. Enter the fax number using the numeric keys and press the enter key.
8. Display Address Number using the up/down cursor keys and press right select key.
9. Enter the address number to be registered using the numeric keys and press the enter key.
10. Enter e-mail addresses and the folder for saving documents sent to computers.
11. Press the enter key.

Entering group destinations in the address book

Enter a group of destinations in the address book.

1. Press the right select key.
2. Select Add Address using the up/down cursor keys and press the enter key.
3. Select Group using the up/down cursor keys and press the enter key.
4. Select Group Name using the up/down cursor keys and press right select key.
5. Enter a group name and press the enter key.
6. Select Group Member using the up/down cursor keys and press right select key.
7. Press the right select key.
8. Select Add Member using the up/down cursor keys and press the enter key.
9. Select the destination to register to the group using the up/down cursor keys. Press the enter key.
10. Press the enter key.
11. Display Address Number using the up/down cursor keys and press the right select key.
12. Enter the address number to register using the numeric keys and press the enter key.
13. Press the enter key.

(8) Program Setting

Registering programs

1. Select an unassigned number for a program number using the up/down cursor keys and press the enter key.
2. Select Copy or Send using the up/down cursor keys and press the enter key.
3. Press the left select key.

1-3-3 Service settings

The machine is equipped with a service settings which can be operated by service person.

(1) Executing a service setting item

¥ Executing a system setting item

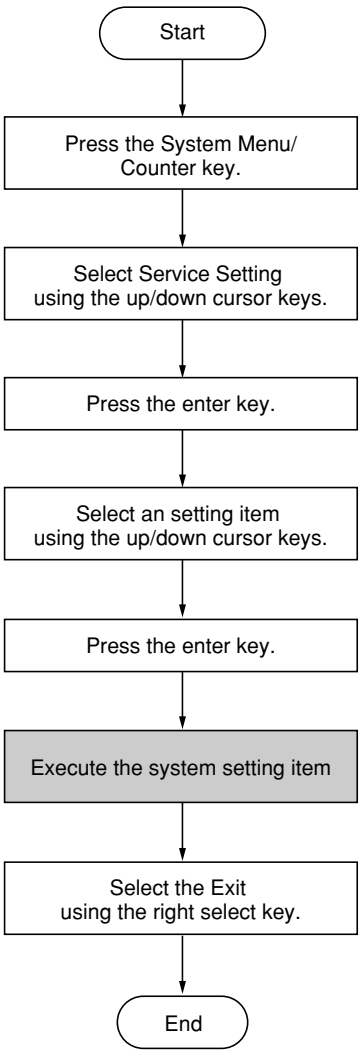

(2) Contents of service setting items

Service items	Description
Ser. Status Page	**Printing a status page for service purpose** **Description** Prints a status page for service purpose. The status page includes various printing settings and service cumulatives. **Procedure** 1.Select [Ser. Status Page] using up/down cursor keys and press the enter key. 2.Select [Yes] using the left select key. Service status pages (2 pages) are output. **Sample of service status page**

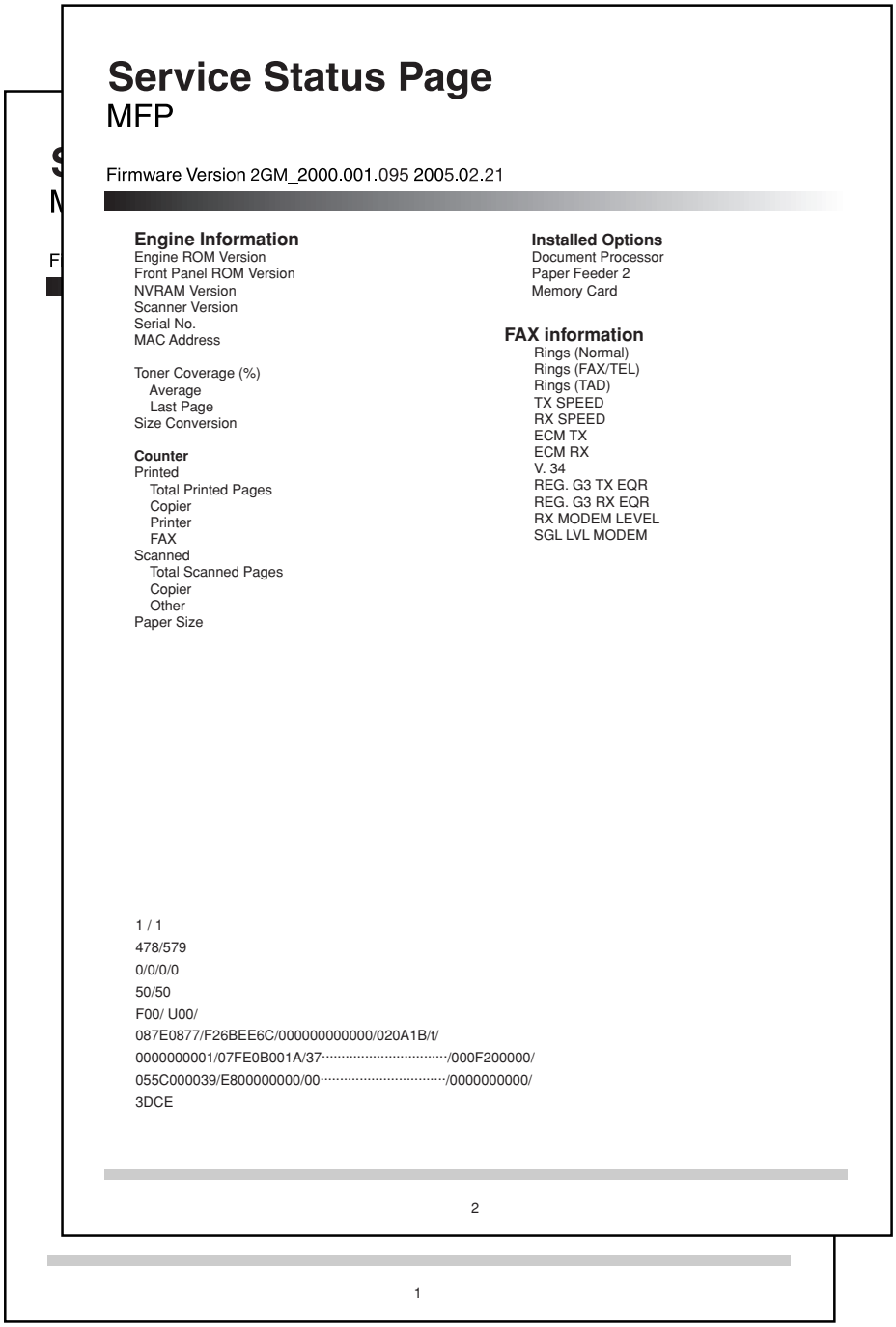

Service Status Page
MFP

Firmware Version 2GM_2000.001.095 2005.02.21

Engine Information
Engine ROM Version
Front Panel ROM Version
NVRAM Version
Scanner Version
Serial No.
MAC Address

Toner Coverage (%)
Average
Last Page
Size Conversion

Counter
Printed
Total Printed Pages
Copier
Printer
FAX
Scanned
Total Scanned Pages
Copier
Other
Paper Size

Installed Options
Document Processor
Paper Feeder 2
Memory Card

FAX information
Rings (Normal)
Rings (FAX/TEL)
Rings (TAD)
TX SPEED
RX SPEED
ECM TX
ECM RX
V. 34
REG. G3 TX EQR
REG. G3 RX EQR
RX MODEM LEVEL
SGL LVL MODEM

1 / 1
478/579
0/0/0/0
50/50
F00/ U00/
087E0877/F26BEE6C/000000000000/020A1B/t/
0000000001/07FE0B001A/37·····/000F200000/
055C000039/E800000000/00·····/0000000000/
3DCE

2

1

Service items	Description
FAX Country Code	**Setting the FAX destination code** **Description** To set the fax destination code. Basically, the setting need not be changed. **Procedure** 1. Select [FAX Country Code] using up/down cursor keys and press the enter key. 2. Enter the country code using the numeric keys.
FAX Call Set.	**Connection to PBX (Private Branch Exchange)** **(220-240 V specifications only)** **Description** Set PBX setting when using the machine in environment in which PBX for connection to multiple phones for business use is installed. **Procedure** 1. Select [FAX Call Set.] using cursor up/down keys and press the enter key. 2. Select [Exchange Setting] using cursor up/down keys and press the enter key. 3. Select [PBX] using cursor up/down keys and press the enter key. PSTN: Use when connecting the machine to a public switched telephone network (default). PBX: Use when connecting the machine to PBX. 4. Select [Dial No. to PSTN] using cursor up/down keys and press the enter key. 5. Enter the number to access the outside line using the numeric keys and press the enter key. Setting range: 0 to 9, 00 to 99
Remote Diag. Set	**Setting the FAX remote diagnosis system** **Description** Set to take advantage of our remote diagnosis system. **Procedure** 1. Select [Remote Diag. Set] using up/down cursor keys and press the enter key. 2. Select [Off] or [On] using the up/down cursor keys and press the enter key.
Remote Diag. ID	**Entering the FAX remote ID number** **Description** Register the designated remote test ID for remote diagnosis. In order to perform the remote diagnosis, it needs to be set as On by setting the FAX remote diagnosis system. **Procedure** 1. Select [Remote Diag. ID] using cursor up/down keys and press the enter key. 2. Enter a 4-digit ID using the numeric keys.

1-4-1 Error codes

(1) Error code

Error codes are listed on the communication reports, activity report, etc. The codes consist of an error code indication U followed by a 5-digit number. (Error codes for V34 communication errors start with an E indication, followed by five digits.)

The upper three of the five digits indicate general classification of the error and its cause, while the lower two indicate the detailed classification. Items for which detailed classification is not necessary have 00 as the last two digits.

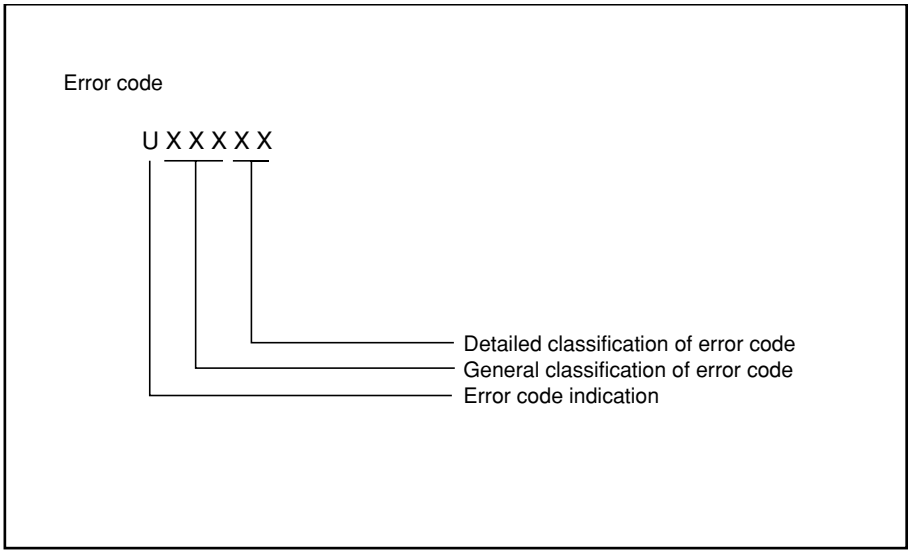

(2) Table of general classification

Error code	Description
U00000	No response or busy after the set number of redials.
U00100	Transmission was interrupted by a press of the stop/clear key.
U00200	Reception was interrupted by a press of the stop/clear key.
U00300	Recording paper on the destination unit has run out during transmission.
U004XX	A connection was made but interrupted during handshake with the receiver unit (refer to page 1-4-4 “U004XX error code table”).
U00500	Multiple communication was interrupted and call was not made on destination units after interruption.
U006XX	Communication was interrupted because of a machine problem (refer to page 1-4-5 “U006XX error code table”).
U00700	Communication was interrupted because of a problem in the destination unit.
U008XX	A page transmission error occurred in G3 mode (refer to page 1-4-5 “U008XX error code table”).
U009XX	A page reception error occurred in G3 mode (refer to page 1-4-5 “U009XX error code table”).
U010XX	Transmission in G3 mode was interrupted by a signal error (refer to page 1-4-6 “U010XX error code table”).
U011XX	Reception in G3 mode was interrupted by a signal error (refer to page 1-4-8 “U011XX error code table”).
U01400	An invalid one-touch key was specified during communication.
U01500	A communication error occurred when calling in V.8 mode.
U01600	A communication error occurred when called in V.8 mode.
U017XX	A communication error occurred before starting T.30 protocol during transmission in V.34 mode (refer to page 1-4-10 “U017XX error code table”).
U018XX	A communication error occurred before starting T.30 protocol during reception in V.34 mode (refer to page 1-4-10 “U018XX error code table”).
U02000	Relay broadcast was refused by a relay station because of a mismatch in permit ID number and permit telephone number when a relay command was issued.
U02100	A relay command failed because the destination unit (relay station) had no relay broadcast capability.
U02200	A relay command from a command station failed because a telephone number that was not registered in the relay station was specified. Or, relay broadcast was requested to a relay station but failed because a telephone number that was not registered in the relay station was specified.
U023XX	Receiving station information was not normally received in reception of a relay command (refer to page 1-4-10 “U023XX error code table”).
U02400	An interoffice subaddress-based relay transmission was interrupted because of a mismatch in the specified relay box number.
U03000	No document was present in the destination unit when polling reception started.
U03100	In reverse polling, although no original was set in the destination unit, transmission was complete.
U03200	In confidential polling reception, data was not accumulated in the specified box in the destination unit. Or, in interoffice subaddress-based bulletin board reception, data was not stored in the box specified by the destination unit.
U03300	In polling reception from a unit of our make, operation was interrupted due to a mismatch in permit ID or telephone number. Or, in interoffice subaddress-based bulletin board reception, operation was interrupted due to a mismatch in permit ID or telephone number.
U03400	Polling reception was interrupted because of a mismatch in individual numbers (destination unit is either of our make or by another manufacturer).

Error code	Description
U03500	In confidential polling reception, the specified confidential box No. was not registered in the destination. Or, in interoffice subaddress-based bulletin board reception, the specified Subaddress confidential box number was not registered in the destination unit. Or, the destination was being accessed.
U03600	Confidential polling reception was interrupted because of a mismatch in specified confidential box No. Or, an interoffice subaddress-based bulletin board reception was interrupted because of a mismatch in the specified subaddress confidential box number.
U03700	Confidential polling reception failed because the destination unit had no confidential polling transmission capability or data was not accumulated in any box in the destination unit. Or, data was not stored in any subaddress confidential box in the destination unit.
U04000	The confidential box specified for confidential transmission was not registered in the destination unit. Or, in interoffice subaddress-based transmission mode, the specified subaddress box number was not registered in the destination unit. Or, the destination was being accessed.
U04100	Confidential transmission failed because the destination unit had no confidential capability. Or, subaddress-based transmission failed because the destination unit had no subaddress-based reception capability.
U04200	In encrypted transmission, the specified encryption box was not registered in the destination unit.
U04300	Encrypted transmission failed because the destination unit had no encrypted communication capability.
U044XX	Communication was interrupted because of an encryption key error during encrypted transmission (refer to page 1-4-10 “U044XX error code table”).
U04500	Encrypted reception was interrupted because of a mismatch in encryption keys.
U05000	In transmission with a specified number, the set number of originals was different from the number of transmitted originals.
U05100	Password check transmission was interrupted because the permit ID did not agree.
U05200	Password check reception was interrupted because the permit ID did not agree.
U05300	Destination unit in password check reception mode did not receive data because the permit ID did not agree.
U06199	When the original size setting was Letter/A4, it was going to transmit the original of Legal/Folio size from document processor, and reading was stopped because the setting and original was not match.
U09000	G3 communication was attempted but failed because the destination unit was a G2 machine.
U12000	Relay broadcast was requested from a command station but memory overflowed during reception.
U12100	Relay was commanded but memory overflowed in the destination unit (relay station).
U14000	Memory overflowed during confidential reception. Or, in subaddress-based confidential reception, memory overflowed.
U14100	Memory overflowed in the destination unit during confidential transmission. Or, in interoffice subaddress-based transmission, memory overflowed in the destination unit.
U19000	Memory overflowed during memory reception.
U19100	Memory overflowed in the destination unit during transmission.
U19200	Memory transmission failed because a decoding error occurred.
U19300	Transmission failed because an error occurred during JBIG encoding.
U19400	Reception failed because an error occurred during JBIG decoding.
U30100	Memory has been exhausted while scanning the original document.

(2-1) U004XX error code table: Interrupted phase B

Error code	Description
U00420	A relay request was received from the host center but interrupted because of a mismatch in permit ID or telephone number.
U00430	Polling request (confidential or reverse) was received but interrupted because of a mismatch in permit number.
U00431	Confidential polling transmission was interrupted because the specified confidential box No. was not registered.
U00432	Confidential polling transmission was interrupted because of a mismatch in confidential box ID number.
U00433	Confidential polling request was received but data was not present in the confidential box.
U00434	Confidential polling request was received but interrupted because the specified confidential box No. was intended for encryption.
U00435	Confidential polling request was received but interrupted because the specified confidential box was being accessed.
U00440	Confidential reception was interrupted because the specified confidential box No. was not registered. Or, subaddress-based confidential reception was interrupted because the specified subaddress box was not registered. Or, subaddress-based confidential reception was interrupted because the specified subaddress box No. was being accessed.
U00441	Confidential reception was interrupted because the specified confidential box No. was intended for encryption.
U00450	The destination unit in password check transmission mode interrupted transmission because of a mismatch in permit ID.
U00460	Encrypted reception was interrupted because the specified encryption box number was not registered. Or, encrypted reception request was received but interrupted because the specified encryption box was being accessed.
U00462	Encrypted reception was interrupted because the encryption key for the specified encryption box was not registered.

(2-2) U006XX error code table: Problems with the unit

Error code	Description
U00600	The document processor cover is open.
U00601	Document jam or the document length exceeds the maximum.
U00602	Image scanning section problem.
U00603	No document feed.
U00604	Document length exceeded the limit of the bitmap memory capacity.
U00610	Recording section cover is open.
U00611	Recording paper JAM
U00613	Image writing section problem
U00614	Nearly empty of recording paper
U00615	Empty of recording paper
U00620	Copier fixing unit problem
U00622	Copier drive motor problem
U00655	CTS was not activated after RTS due to a modem error.
U00656	Data was not transmitted after CTS was activated due to a modem error.
U00670	Power was cut off during communication.
U00677	There was no file to transmit in the memory transmission mode.
U00690	System error.

(2-3) U008XX error code table: Page transmission error

Error code	Description
U00800	A page transmission error occurred because of reception of a RTN or PIN signal.
U00810	A page transmission error reoccurred after retry of transmission in the ECM mode.

(2-4) U009XX error code table: Page reception error

Error code	Description
U00900	An RTN or PIN signal was transmitted because of a page reception error.
U00910	A page reception error remained after retry of transmission in the ECM mode.

(2-5) U010XX error code table: G3 transmission

Error code	Description
U01000	An FTT signal was received for a set number of times after TCF signal transmission at 2400 bps. Or, an RTN signal was received in response to a Q signal (excluding EOP) after transmission at 2400 bps.
U01001	Function of the unit differs from that indicated by a DIS signal.
U01010	No relevant signal was received after transmission of a DNL (MPS or EOM) signal, and the preset number of command retransfers was exceeded (between units of our make).
U01011	No relevant signal was received after transmission of a DCS, TCF signal, and the preset number of command retransfers was exceeded.
U01012	No relevant signal was received after transmission of an NSS1, NSS2 (TCF) signal, and the preset number of command retransfers was exceeded (between units of our make).
U01013	No relevant signal was received after transmission of an NSS3, TCF signal, and the preset number of command retransfers was exceeded (between units of our make).
U01014	No relevant signal was received after transmission of an MPS signal, and the preset number of command retransfers was exceeded.
U01015	No relevant signal was received after transmission of an EOM signal, and the preset number of command retransfers was exceeded.
U01016	An MCF signal was received but no DIS signal was received after transmission of an EOM signal, and T1 timeout was detected.
U01017	No relevant signal was received after transmission of an EOP signal, and the preset number of command retransfers was exceeded.
U01018	No relevant signal was received after transmission of a PRI-EOP signal, and the preset number of command retransfers was exceeded.
U01019	No relevant signal was received after transmission of a CNC signal, and the preset number of command retransfers was exceeded (between units of our make).
U01020	No relevant signal was received after transmission of a CTC signal, and the preset number of command retransfers was exceeded (ECM).
U01021	No relevant signal was received after transmission of an EOR.Q signal, and the preset number of command retransfers was exceeded (ECM).
U01022	No relevant signal was received after transmission of an RR signal, and the preset number of command retransfers was exceeded (ECM).
U01023	No relevant signal was received after transmission of a PSS.NULL signal, and the preset number of command retransfers was exceeded (ECM).
U01024	No relevant signal was received after transmission of a PSS.MPS signal, and the preset number of command retransfers was exceeded (ECM).
U01025	No relevant signal was received after transmission of a PPS.EOM signal, and the preset number of command retransfers was exceeded (ECM).
U01026	No relevant signal was received after transmission of a PPS.EOP signal, and the preset number of command retransfers was exceeded (ECM).
U01027	No relevant signal was received after transmission of a PPS.PRI-EOP signal, and the preset number of command retransfers was exceeded (ECM).
U01028	T5 time-out was detected during ECM transmission (ECM).
U01040	A DCN or other inappropriate signal was received during standby for DIS signal reception.
U01041	A DCN signal was received after transmission of a DNL (MPS or EOM) signal (between units of our make).
U01042	A DCN signal was received after transmission of a DCS, TCF signal.
U01043	A DCN signal was received after transmission of an NSS1, NSS2 (TCF) signal (between units of our make).
U01044	A DCN signal was received after transmission of an NSS3, TCF signal (between units of our make).

Error code	Description
U01045	A DCN or other inappropriate signal was received after transmission of an MPS signal.
U01046	A DCN or other inappropriate signal was received after transmission of an EOM signal.
U01047	A DCN or other inappropriate signal was received after transmission of an EOP signal.
U01048	A DCN signal was received after transmission of a PRI-EOP signal.
U01049	A DCN signal was received after transmission of a CNC signal (between units of our make).
U01050	A DCN signal was received after transmission of a CTC signal (ECM).
U01051	A DCN signal was received after transmission of an EOR.Q signal (ECM).
U01052	A DCN signal was received after transmission of an RR signal (ECM).
U01053	A DCN signal was received after transmission of a PPS.NULL signal (ECM).
U01054	A DCN signal was received after transmission of a PPS.MPS signal (ECM).
U01055	A DCN signal was received after transmission of a PPS.EOM signal (ECM).
U01056	A DCN signal was received after transmission of a PPS.EOP signal (ECM).
U01057	A DCN signal was received after transmission of a PPS.PRI-EOP signal (ECM).
U01070	Polarity reversal was detected during handshake.
U01071	Polarity reversal was detected during message transmission.
U01072	A break in loop current was detected during transmission.
U01073	During reverse polling in V.34 mode at the receiver unit, a CM signal was not detected when transmitting after reception.
U01080	A PIP signal was received after transmission of a PPS.NULL signal.
U01091	During transmission in V.34 mode, communication was interrupted because a PPR signal was received over 10 times even after reducing the communication speed to the minimum with the symbol speed maintained at the level of connection.
U01092	During transmission in V.34 mode, communication was interrupted because of an impossible combination of the symbol speed and communication speed.

(2-6) U011XX error code table: G3 reception

Error code	Description
U01100	Function of the unit differs from that indicated by a DCS signal.
U01101	Function of the unit (excl. communication mode select) differs from that indicated by an NSS signal.
U01102	A DTC (NSC) signal was received when no transmission data was in the unit.
U01110	No response after transmission of a DIS signal.
U01111	No response after transmission of a DTC (NSC) signal.
U01112	No training reception after reception of a DCS or NSS signal.
U01113	No response after transmission of an FTT signal.
U01114	No message reception after transmission of a CFR signal.
U01115	No message reception after transmission of an MCF signal.
U01116	No message reception after transmission of a PPR signal.
U01117	No message reception after transmission of a CTR signal.
U01118	No message reception after transmission of an ERR signal.
U01119	No further signals were received after reception of a message.
U01120	No response after transmission of an MCF signal.
U01121	No response after transmission of an RTP signal.
U01122	No response after transmission of an RTN signal.
U01123	No response after transmission of a PIP signal.
U01124	No response after transmission of a PIN signal.
U01125	No response after transmission of a CNS signal (between units of our make).
U01126	No response after transmission of a PPR signal (ECM).
U01127	No response after transmission of an ERR signal (ECM).
U01128	No response after transmission of an RNR signal (ECM).
U01129	No response after transmission of an SPA signal (short protocol).
U01140	A DCN signal was received after transmission of a DIS signal.
U01141	A DCN signal was received after transmission of a DTC signal.
U01142	A DCN signal was received after transmission of a DCS or NSS signal.
U01143	A DCN signal was received after transmission of an FTT signal.
U01144	A DCN signal was received after transmission of a CFR signal.
U01145	A DCN signal was received after reception of a message.
U01146	A DCN signal was received after transmission of an MCF signal (interoffice communication after reception of an MPS, EOM signal or confidential interoffice communication).
U01147	A DCN signal was received after transmission of an RTP signal.
U01148	A DCN signal was received after transmission of an RTN signal.
U01149	A DCN signal was received after transmission of a PIP signal.
U01150	A DCN signal was received after transmission of a PIN signal.
U01151	A DCN signal was received after transmission of a PPR signal (ECM).
U01152	A DCN signal was received after transmission of a CTR signal (ECM).
U01153	A DCN signal was received after transmission of an ERR signal (ECM).
U01154	A DCN signal was received after transmission of an RNR signal (ECM).
U01155	A DCN signal was received after transmission of an SPA signal (short protocol).
U01160	During message reception, transmission time exceeded the maximum transmission time per line.
U01161	Number of error lines exceeded limits during message reception.
U01162	A break in loop current was detected during message reception.
U01163	Polarity reversal was detected during message reception.
U01164	One page length exceeded the specified length during message reception.
U01170	A decoding error occurred during MMR message reception.
U01172	During reverse polling in V.34 mode at the transmitting unit, a JM signal was not detected after transmission of a CM signal when receiving after transmission.

Error code	Description
U01191	Communication was interrupted because an error occurred during an image data reception sequence in the V.34 mode.
U01199	A DIS signal with different FIF was received after transmission of a DIS signal.

(2-7) U017XX error code table: V.34 transmission

Error code	Description
U01700	A communication error occurred in phase 2 (line probing).
U01720	A communication error occurred in phase 4 (modem parameter exchange).
U01721	Operation was interrupted due to the absence of a common communication speed between units.

U01700: A communication error that occurs at the transmitting unit in the period after transmission of INFO0 before entering phase 3 (primary channel equivalent device training). For example, INFO0/A/Abar (B/Bbar, for polling transmission)/INFOh was not detected.
U01720: A communication error that occurs at the transmitting unit in the period after initiating the control channel before entering the T.30 process. For example, PPh/ALT/MPh/E was not detected.
U01721: In the absence of a common communication speed between units (including when an impossible combination of communication speed and symbol speed occurs) after MPh exchange; 1) a DCN signal was received from the destination unit, and the line was cut; or 2) a DIS (NSF, CSI) signal was received from the destination unit and, in response to the signal, the unit transmitted a DCN signal, and the line was cut.

(2-8) U018XX error code table: V.34 reception

Error code	Description
U01800	A communication error occurred in phase 2 (line probing).
U01810	A communication error occurred in phase 3 (primary channel equivalent device training).
U01820	A communication error occurred in phase 4 (modem parameter exchange).
U01821	Operation was interrupted due to the absence of a common communication speed between units.

U01800: A communication error that occurs at the receiver unit in the period after transmission of INFO0 before entering phase 3 (primary channel equivalent device training). For example, INFO0/B/Bbar (A/Abar, for polling reception)/probing tone was not detected.
U01810: A communication error that occurs at the receiver unit in phase 3 (primary channel equivalent device training). For example, S/Sbar/PP/TRN was not detected.
U01820: A communication error that occurs at the receiver unit in the period after initiating the control channel before entering the T.30 process. For example, PPh/ALT/MPh/E was not detected.
U01821: In the absence of a common communication speed between units (including when an impossible combination of communication speed and symbol speed occurs) after MPh exchange, a DCN signal was transmitted to the destination unit and the line was cut.

(2-9) U023XX error code table: Relay command abnormal reception

Error code	Description
U02303	Timeout was detected before a correct DNL signal was received.
U02304	A signal other than MPS or EOM signal was received after a DNL signal was received.

(2-10) U044XX error code table: Encrypted transmission

Error code	Description
U04400	Encrypted transmission was interrupted because encryption keys did not agree.
U04401	Calling failed during encrypted transmission because the encryption key was not registered.

1-5-1 Self-diagnosis

(1) Self diagnostic codes

Code	Contents	Remarks	
		Causes	Check procedures/corrective measures
C0030	**Fax control PWB system problem** • Processing with the fax software was disabled due to a hardware or software problem.	Defective fax control PWB.	Replace the fax control PWB and check for correct operation.
C0070	**Fax control PWB incompatibility detection problem** • Fax software is not compatible with main software.	Fax software or main software is something of the other machine.	Check the version of the Fax software and the main software, upgrade the version to the compatible software.
C0280	**Communication problem between the fax control PWB and main PWB** • Communication between the fax control PWB and the main PWB of the machine cannot be performed normally.	Poor contact in the connector terminals.	Check the connection of connector YC1 on the fax control PWB and the connector YC1 on the main PWB. Repair or replace if necessary.
		Defective main PWB or fax control PWB.	Replace the main PWB or fax control PWB and check for correct operation.
C0830	**Flash ROM program area checksum error** • A checksum error occurred with the program of the fax control PWB.	Defective fax control PWB.	Replace the fax control PWB and check for correct operation.
C0870	**Fax control PWB to main PWB high-capacity data transfer problem** • High-capacity data transfer between the fax control PWB and the main PWB of the machine was not normally performed even if the data transfer was retried the specified times.	Poor contact in the connector terminals.	Check the connection of connector YC1 on the fax control PWB and YC1 on the main PWB, and the continuity across the connector terminals. Repair or replace if necessary.
		Defective fax control PWB or main PWB.	Replace the fax control PWB or main PWB and check for correct operation.
C0880	**Fax control PWB program archive problem** • When power is turned on, the compressed program in the Flash ROM on the fax control PWB was not successfully decompressed.	Defective fax control PWB.	Replace the fax control PWB and check for correct operation.
C0920	**Fax file system error** • The backup data is not retained for file system abnormality of flash memory of the fax control PWB.	Defective fax control PWB.	Replace the fax control PWB and check for correct operation.

1-6-1 Upgrading the firmware on the fax control PWB

Firmware upgrading requires the following tools:
Compact Flash (Products manufactured by SANDISK are recommended.)

NOTE
- When writing data from a computer to a new Compact Flash, be sure to format it from the computer in advance.
- Since the data is supplied with a compressed file, extract the data and then write it to the Compact Flash.
- Do not write data other than the files below to the Compact Flash.
  File
  VERDEF
  aplc.hex (or in addition the modified software file)

Procedure

1. Turn the power switch off and disconnect the power plug.
2. Disconnect the modular cord to the line jack.
3. Remove two screws and then remove the FAX assembly.

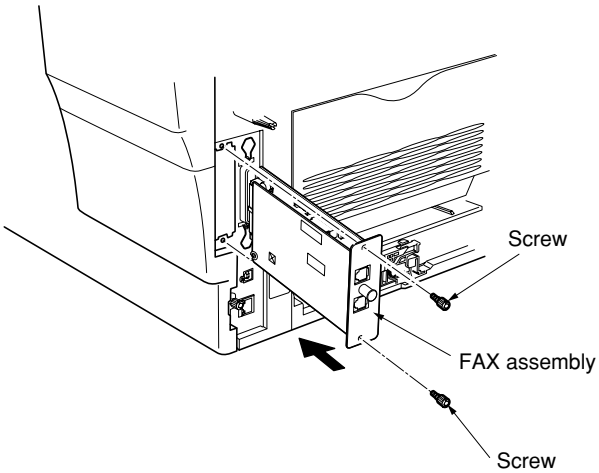

Figure 1-7-1

4. Remove the pin and then remove the memory cover.
5. Remove two screws and then remove the CF cover.

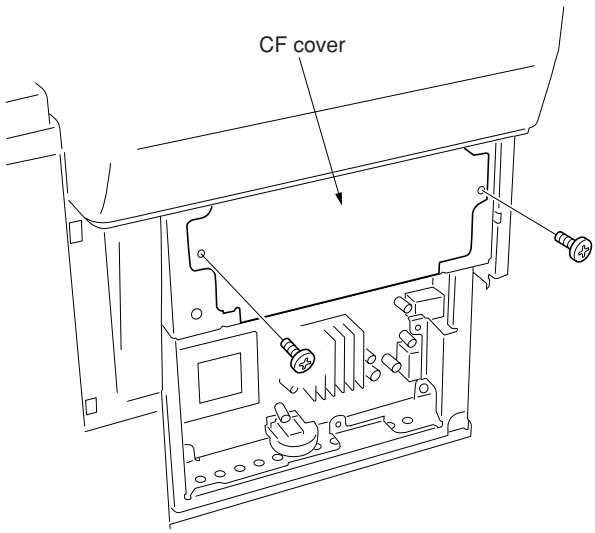

Figure 1-7-2

6. Insert Compact Flash in a CF slot on the main PWB.
   * Insert it straight all the way into the machine with the front side facing the rear of the machine. If the power switch is turned on when the Compact Flash is not properly inserted, the main PWB may be damaged.
7. Insert the FAX assembly along the rail in the machine until it clicks in place. Attach the fax assembly using two screws from step 3.
   IMPORTANT: When inserting the FAX assembly, slide it slowly and firmly all the way in.
8. Insert the power plug and turn the power switch on.
   * Downloading is displayed on the operation panel and firmware upgrade operation will start (for approximately 45 seconds).
   Caution:
   Never turn the power switch off during upgrading.
9. Completed is displayed on the operation panel when upgrading is complete.
10. Turn the power switch off and disconnect the power plug.
11. Remove Compact Flash from the main PWB.
12. Refit the CF cover and memory cover.
13. Connect the modular cord to the line jack.
14. Insert the power plug and turn the power switch on.

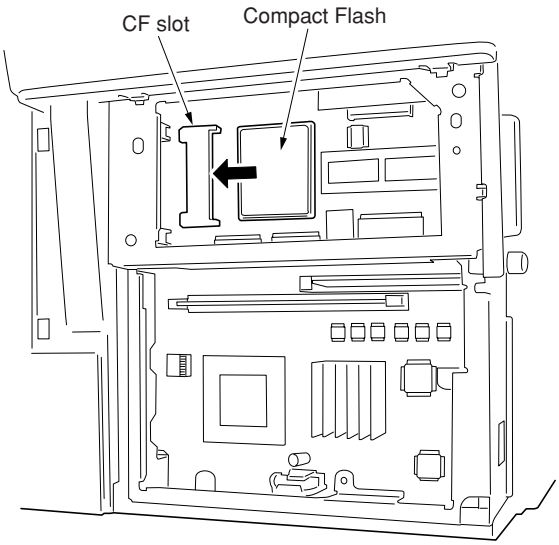

Figure 1-7-3

2-1-1 Electrical parts layout

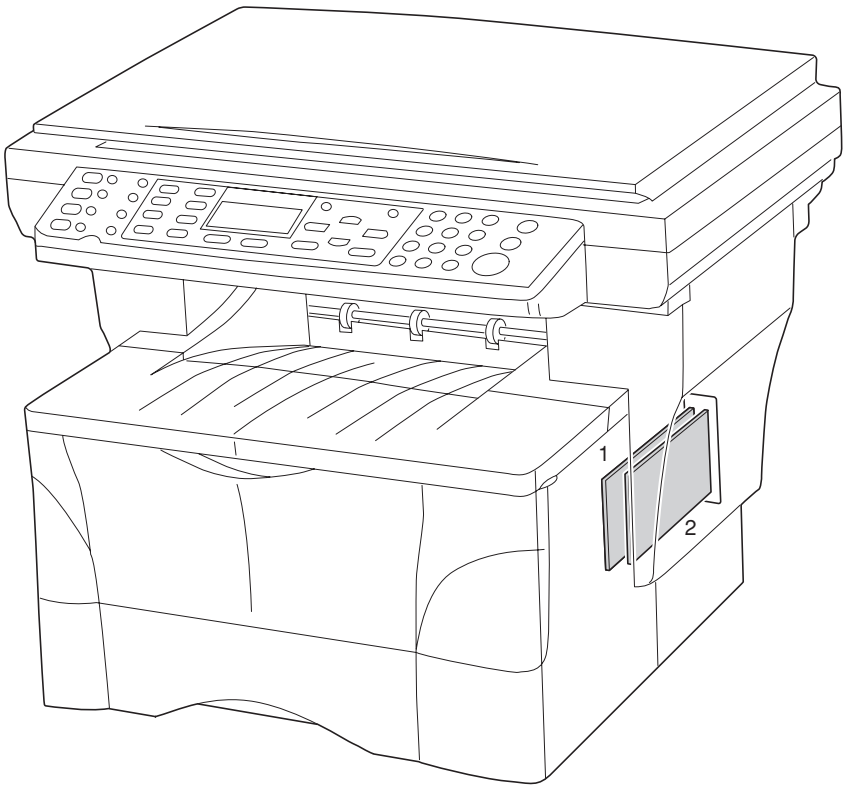

Figure 2-1-1

1. Fax control PWB (FCPWB) ..... Modulates, demodulates, compresses, decompresses and smoothes out image data, and converts resolution of image data.
2. NCU PWB (NCUPWB) ..... Controls connection to the telephone line.

2-2-1 Fax control PWB

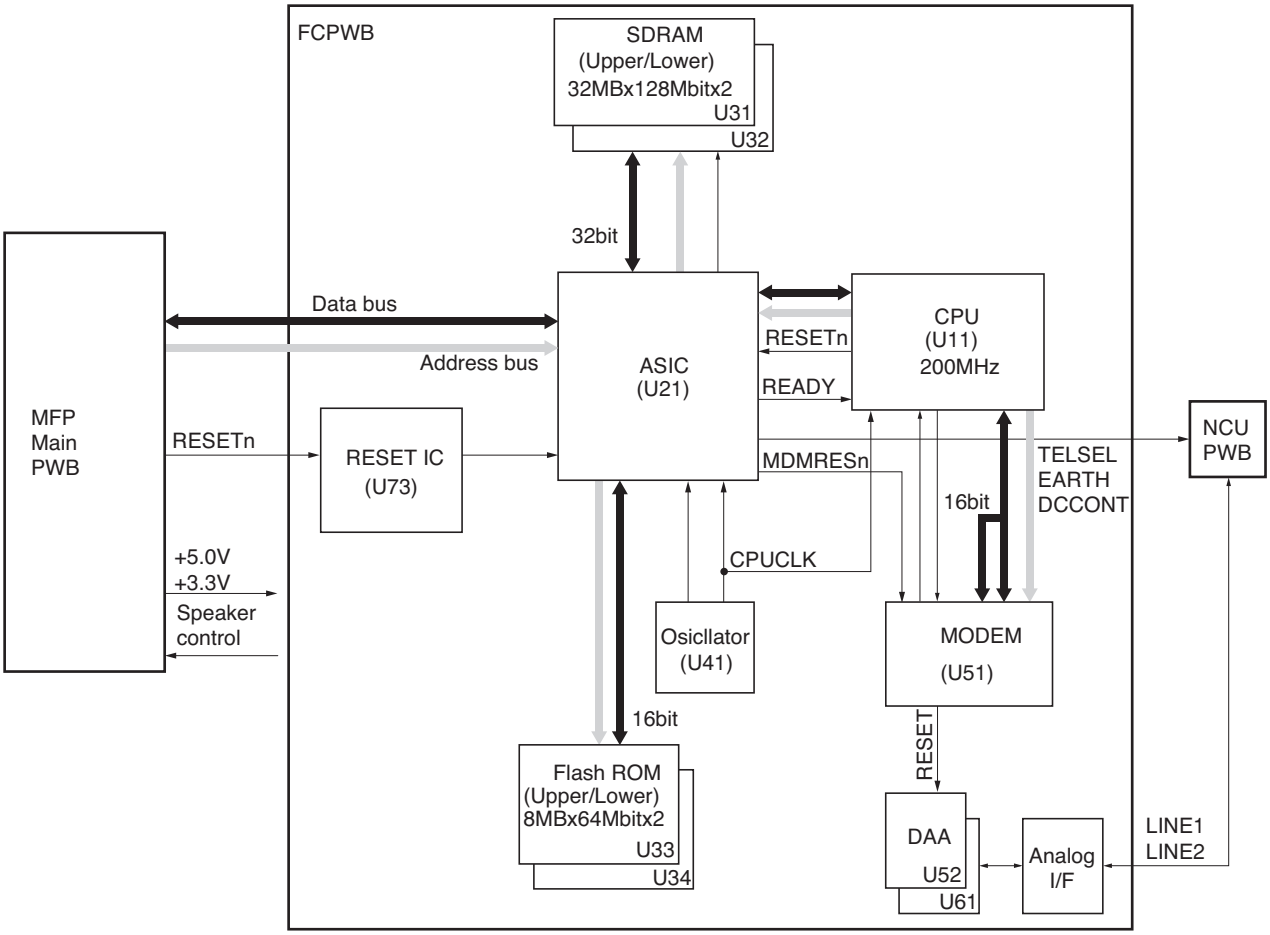

Figure 2-2-1 Fax control PWB block diagram

The fax control PWB (FCPWB) controls the overall fax operation.
To transmit a fax, image data scanned by the optical section of the MFP is processed by the main PWB and then sent to the fax control PWB (FCPWB). Received image data is first stored in the bitmap area of the SDRAM U31/U32 page by page and compressed using the MH, MR, MMR or JBIG method. The data is then stored in the image memory area of the Flash ROM U33/U34and sent to the modem LSI U51 to be modulated from digital signal to analog signal before it is sent to the telephone line via the NCU PWB (NCUPWB).
To receive a fax, analog image data received from the telephone line via the NCU PWB (NCUPWB) is sent to the modem LSI U51 and, after demodulation into digital signals, stored in the image memory area of the Flash ROM U33/U34. The image data is then decompressed and converted into the bitmap area of the SDRAM U31/U32 page by page and sent to the ASIC U21 for resolution conversion and smoothing, and is passed to the main PWB as print image data.

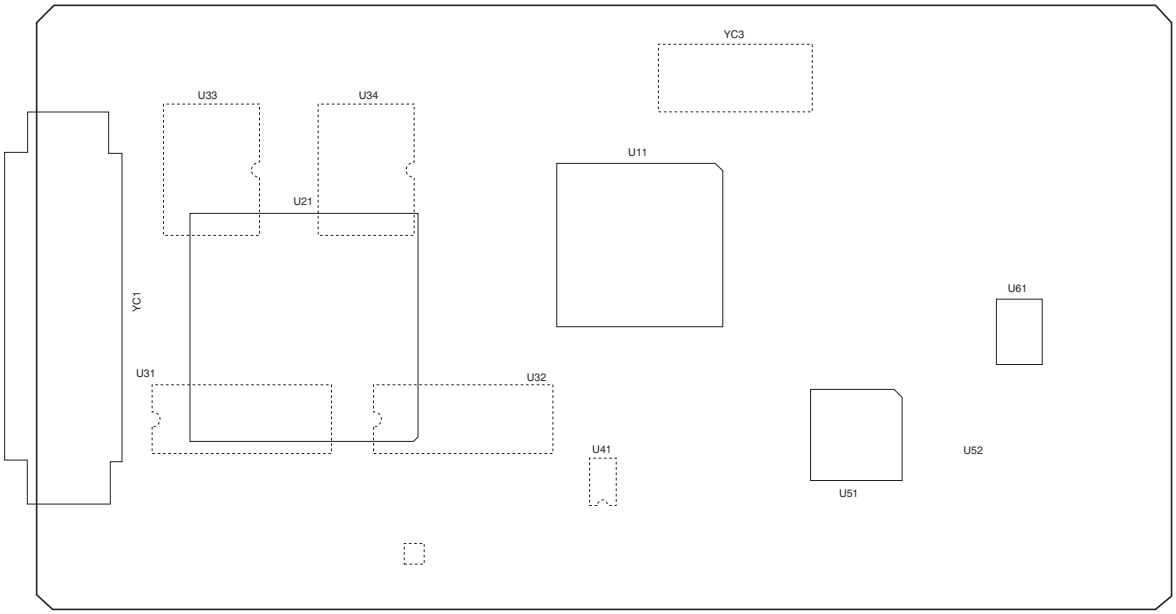

Figure 2-2-2 Fax control PWB silk-screen diagram

Connector	Pin No.	Signal	I/O	Voltage	Description
YC1	A1	NC	-	-	Not used
Connected to the main PWB.	A2	NC	-	-	Not used
	A3	AUDIO	O	3.3 V DC	Speaker control signal
	A4	+3.3 V	I	3.3 V DC	3.3 V DC supply
	A5	GND	-	-	Ground
	A6	A13	-	-	Not used
	A7	A11	I	3.3 V DC	Address bus A11
	A8	A9	I	3.3 V DC	Address bus A9
	A9	GND	-	-	Ground
	A10	A6	I	3.3 V DC	Address bus A6
	A11	A4	I	3.3 V DC	Address bus A4
	A12	A2	I	3.3 V DC	Address bus A2
	A13	GND	-	-	Ground
	A14	OP2IFn	I	3.3 V DC	Fax control signal
	A15	OP2IRn	O	3.3 V DC	Fax control signal
	A16	RDY	I	5 V DC	Fax ready signal
	A17	GND	-	-	Ground
	A18	IORn	I	5 V DC	Fax control signal
	A19	RESETn	I	5 V DC	Reset signal
	A20	D15	I	5 V DC	Data signal D15
	A21	GND	-	-	Ground
	A22	D12	I	5 V DC	Data signal D12
	A23	D10	I	5 V DC	Data signal D10
	A24	D8	I	5 V DC	Data signal D8
	A25	GND	-	-	Ground
	A26	D5	I	5 V DC	Data signal D5
	A27	D3	I	5 V DC	Data signal D3
	A28	D1	I	5 V DC	Data signal D1
	A29	GND	-	-	Ground
	A30	NC	-	-	Not used
	B1	NC	-	-	Not used
	B2	TXDREQ	O	3.3 V DC	DREQ transmission signal
	B3	+3.3V	I	3.3 V DC	3.3 V DC supply
	B4	A15	I	3.3 V DC	Address bus A15
	B5	A14	-	-	Not used
	B6	A12	-	-	Not used
	B7	A10	I	3.3 V DC	Address bus A10
	B8	A8	I	3.3 V DC	Address bus A8
	B9	A7	I	3.3 V DC	Address bus A7
	B10	A5	I	3.3 V DC	Address bus A5
	B11	A3	I	3.3 V DC	Address busA3
	B12	A1	I	3.3 V DC	Address bus A1
	B13	+3.3V	I	3.3 V DC	3.3 V DC supply
	B14	OP2ACKn	O	3.3 V DC	Fax control signal
	B15	+5V	I	5 V DC	5 V DC supply
	B16	RXDREQ	O	5 V DC	DREQ reception signal
	B17	RXDMACKn	I	5 V DC	DMACK reception signal
	B18	IOWn	I	5 V DC	Fax control signal
	B19	TXDMACKn	I	5 V DC	DMACK transmission signal
	B20	D14	I	5 V DC	Data signal D14
	B21	D13	I	5 V DC	Data signal D13
	B22	D11	I	5 V DC	Data signal D11
	B23	D9	I	5 V DC	Data signal D9
	B24	D7	I	5 V DC	Data signal D7
	B25	D6	I	5 V DC	Data signal D6
	B26	D4	I	5 V DC	Data signal D4
	B27	D2	I	5 V DC	Data signal D2
	B28	D0	I	5 V DC	Data signal D0
	B29	NC	-	-	Not used
	B30	NC	-	-	Not used

Connector	Pin No.	Signal	I/O	Voltage	Description
YC3	A1	LINE1	I/O	-	Line signal
Connected to the NCU PWB.	A2	LINE1	I/O	-	Line signal
	A3	N.C.	-	-	Not used
	A4	N.C.	-	-	Not used
	A5	N.C.	-	-	Not used
	A6	GND	-	-	Ground
	A7	GND	-	-	Ground
	A8	GND	-	-	Ground
	A9	GND	-	-	Ground
	A10	GND	-	-	Ground
	A11	GND	-	-	Ground
	A12	+5VDC	O	DC5V	5 V DC supply
	A13	+5VDC	O	5 V DC	5 V DC supply
	A15	+5VDC	O	5 V DC	5 V DC supply
	B1	LINE2	I/O	-	Line signal
	B2	LINE2	I/O	-	Line signal
	B3	N.C.	-	-	Not used
	B4	N.C.	-	-	Not used
	B5	N.C.	-	-	Not used
	B6	TELSEL	O	5 V DC	TEL SEL signal
	B10	EARTH	O	3.3 V DC	Ground start control signal
	B12	TELOFHKn	I	3.3 V DC	External line off-hook signal
	B13	DCCONT	O	3.3 V DC	DC/DC converter control signal

2-2-2 NCU PWB

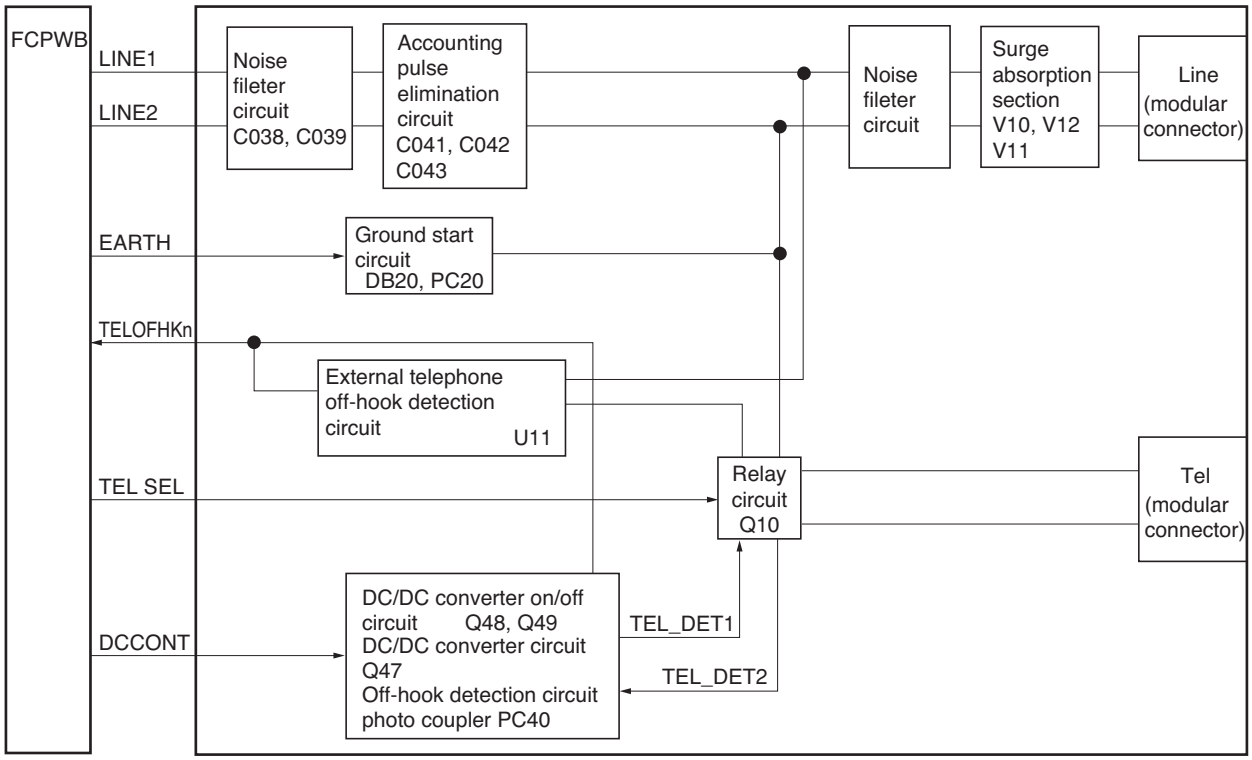

Figure 2-2-3 NCU PWB block diagram

The NCU PWB (NCUPWB) mainly controls the connection to the telephone line. It consists of the circuits shown in the block diagram.
The external telephone off-hook detection circuit U11 detects the off-hook state of the telephone connected.
In the DC/DC converter ON/OFF circuit (Q48 and Q49) , when the DCCONT signal reaches high level, Q48 becomes ON and supplys the electric current to the the DC/DC converter circuit Q47.
In the off-hook detection circuit PC40, by carrying out the off-hook of the external telephone, a loop is formed between TEL_DET1 signal and TEL_DET2 signal, when 3.3 V DC flows to a photo coupler, a TELOFHKn signal is set to low level and an off-hook is detected.
The accounting pulse elimination circuit (C041, C042 and C043) removes signals representing the communication charge information (accounting pulses) before they reach the modem when telephone line is used. This is because accounting pulses obstruct fax communications.
The ground start circuit (DB20 and PC20) requests an outside connection to the private branch exchange (PBX) when calling via the PBX.

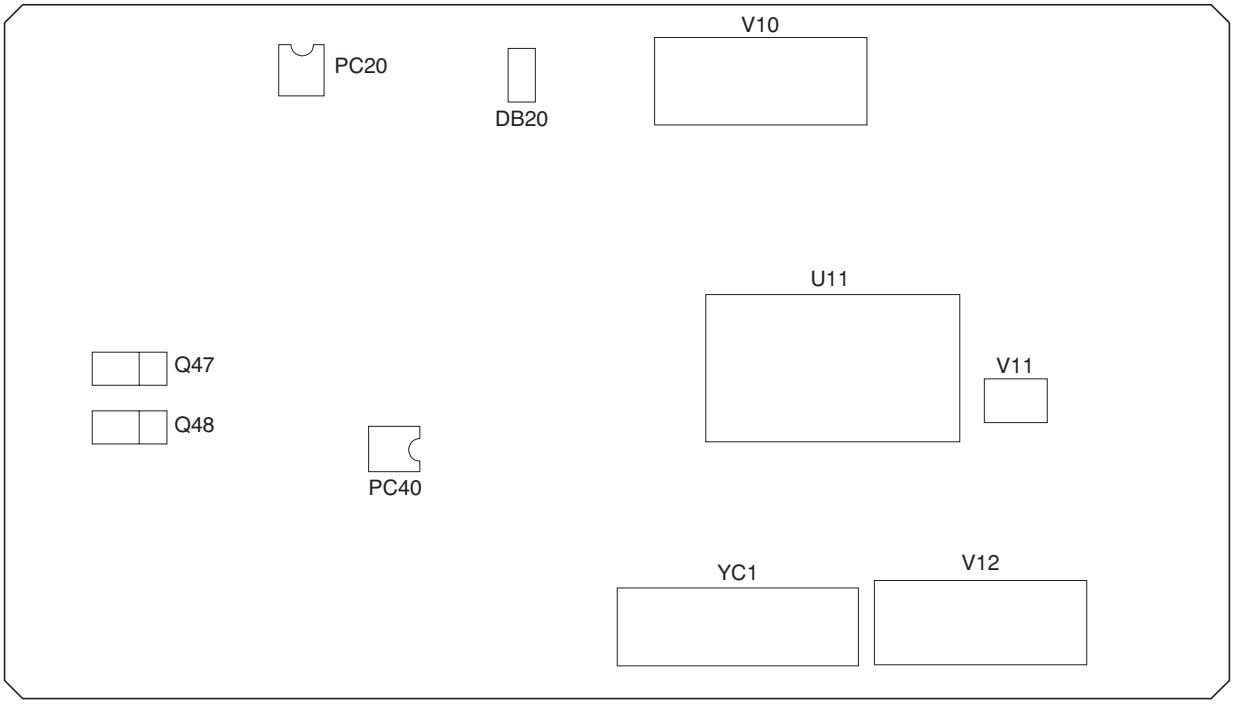

Figure 2-2-4 NCU PWB silk-screen diagram

Connector	Pin No.	Signal	I/O	Voltage	Description
YC1	A1	LINE1	I/O	-	Line signal
Connected to the fax control PWB.	A2	LINE1	I/O	-	Line signal
	A3	N.C	-	-	Not used
	A4	N.C	-	-	Not used
	A5	N.C	-	-	Not used
	A6	GND	-	-	Ground
	A7	GND	-	-	Ground
	A8	GND	-	-	Ground
	A9	GND	-	-	Ground
	A10	GND	-	-	Ground
	A11	GND	-	-	Ground
	A12	+5VDC	I	5 V DC	5 V DC supply
	A13	+5VDC	I	5 V DC	5 V DC supply
	A15	+5VDC	I	5 V DC	5 V DC supply
	B1	LINE2	I/O	-	Line signal
	B2	LINE2	I/O	-	Line signal
	B3	N.C	-	-	Not used
	B4	N.C	-	-	Not used
	B5	N.C	-	-	Not used
	B6	TELSEL	I	5 V DC	TELSEL signal
	B7	TELSEL2	I	-	Not used
	B8	ILOOPUP	I	-	Not used
	B9	ILOOPUP2	I	-	Not used
	B10	EARTH	I	5 V DC	Ground start control signal
	B12	TELOFHKn	O	5 V DC	External line off-hook detection signal
	B13	DCCONT	I	5 V DC	DC/DCconverter control signal

KYOCERA MITA AMERICA, INC.

Headquarters:
225 Sand Road,
Fairfield, New Jersey 07004-0008
TEL : (973) 808-8444
FAX : (973) 882-6000

New York Branch:
1410 Broadway 23rd floor
New York, NY 10018
TEL : (917) 286-5400
FAX : (917) 286-5402

Northeastern Region:
225 Sand Road,
Fairfield, New Jersey 07004-0008
TEL : (973) 808-8444
FAX : (973) 882-4401

Midwestern Region:
201 Hansen Court Suite 119
Wood Dale, Illinois 60191
TEL : (630) 238-9982
FAX : (630) 238-9487

Western Region:
14101 Alton Parkway,
Irvine, California 92618-7006
TEL : (949) 457-9000
FAX : (949) 457-9119

Southeastern Region:
1500 Oakbrook Drive,
Norcross, Georgia 30093
TEL : (770) 729-9786
FAX : (770) 729-9873

Southwestern Region:
2825 West Story Road,
Irving, Texas 75038-5299
TEL : (972) 550-8987
FAX : (972) 252-9786

National Operation Center
& National Training Center:
2825 West Story Road,
Irving, Texas 75038-5299
TEL : (972) 659-0055
FAX : (972) 570-5816

Latin America Division:
8240 N.W. 52nd. Terrace Dawson Building,
Suite 108 Miami, Florida 33166
TEL : (305) 421-6640
FAX : (305) 421-6666

KYOCERA MITA CANADA, LTD.

6120 Kestrel Road, Mississauga,
Ontario L5T 1S8, Canada
TEL : (905) 670-4425
FAX : (905) 670-8116

KYOCERA MITA MEXICO, S.A. DE C.V.

Av. 16 de Septiembre #407
Col. Santa Inés,
Azcapotzalco México,
D.F. 02130, México
TEL : (55) 5383-2741
FAX : (55) 5383-7804

©2005 KYOCERA MITA Corporation
http://www.kyoceramita.com
KYOCERA is a trademark of Kyocera Corporation

Printed in U.S.A.

KYOCERA MITA AMERICA, INC.

Headquarters:
225 Sand Road,
Fairfield, New Jersey 07004-0008
TEL : (973) 808-8444
FAX : (973) 882-6000

New York Branch:
1410 Broadway 23rd floor
New York, NY 10018
TEL : (917) 286-5400
FAX : (917) 286-5402

Northeastern Region:
225 Sand Road,
Fairfield, New Jersey 07004-0008
TEL : (973) 808-8444
FAX : (973) 882-4401

Midwestern Region:
201 Hansen Court Suite 119
Wood Dale, Illinois 60191
TEL : (630) 238-9982
FAX : (630) 238-9487

Western Region:
14101 Alton Parkway,
Irvine, California 92618-7006
TEL : (949) 457-9000
FAX : (949) 457-9119

Southeastern Region:
1500 Oakbrook Drive,
Norcross, Georgia 30093
TEL : (770) 729-9786
FAX : (770) 729-9873

Southwestern Region:
2825 West Story Road,
Irving, Texas 75038-5299
TEL : (972) 550-8987
FAX : (972) 252-9786

National Operation Center
& National Training Center:
2825 West Story Road,
Irving, Texas 75038-5299
TEL : (972) 659-0055
FAX : (972) 570-5816

Latin America Division:
8240 N.W. 52nd. Terrace Dawson Building,
Suite 108 Miami, Florida 33166
TEL : (305) 421-6640
FAX : (305) 421-6666

KYOCERA MITA CANADA, LTD.

6120 Kestrel Road, Mississauga,
Ontario L5T 1S8, Canada
TEL : (905) 670-4425
FAX : (905) 670-8116

KYOCERA MITA MEXICO, S.A. DE C.V.

Av. 16 de Septiembre #407
Col. Santa Inés,
Azcapotzalco México,
D.F. 02130, México
TEL : (55) 5383-2741
FAX : (55) 5383-7804

©2005 KYOCERA MITA Corporation
http://www.kyoceramita.com
KYOCERA is a trademark of Kyocera Corporation

Printed in U.S.A.